Reliable Partner on Intelligent Fluid Solutions

PRODUCT SELECTION REPORT

Model:50SWP12-30-4L/QG
Name:Submersible Sewage Pump



LEO GROUP PUMP CO.,LTD.

2025.10.13

Project Name:	Koslan		
Personal Name:	Koslan	**Company Name:**	
Company Address:			
Website:	www.leopump.com	**Product Model:**	50SWP12-30-4L/QG
Company Name:			LEO GROUP PUMP CO., LTD.

Product Recommendations

Flow(m^3/h): 12 **Head(m):** 30 **Power(kW):** 4

Based on provided information and product parameters, LEO PUMP recommends model:
50SWP12-30-4L/QG

Introduction

Application
•Used In pressure sewage system
•Drainage of wastewater from individual residences, apartment buildings, recreational developments, models
•Transferring wastewater of commercial buildings, industtrial plants, wastewater sampling, small hospitals
•Schools, federal, state and local parks, wastewater drainage
•To transfer various wastewater and sewage

Pump
•Semi-open vortex impeller & reliable grinding system
•Flexible installations with hoses, pipes or quick-couplingsystems
•Float switch as standard accessory for single phase (≤1.1kw)
•Cable Length: 10m
•Double-end mechanical seal
•Stainless steel welded shaft
•Liquid temperature: 0 - 40 °C
•Liquid PH value: 4 - 10
•Max. immersion depth:10 m

Motor
•Frequency/Pole number: 50 Hz/2
•Insulation class: F
•Enclosures class: IP68
•Bearing: Ball type

Product Parameters

Nameplate

Pump flow rate(m^3/h):	12	Total manometric head H(m):	30
Overall efficiency(%):	34.12	Speed(rpm):	2900

Technical

Motor power(kW):	4	Curve tolerance:	GB/T 3216 AppendixA
Maximum lift(m):	32	Maximum use flow(m^3/h):	16
Pump power input(kW):	2.924		

Material

Impeller:	HT200	Pump body:	HT200
Pump shaft:	06Cr19Ni10+45#	Pump cover:	HT200
Upper bearing seat:	HT200	Guide:	06Cr19Ni10
Hanging chain:	06Cr19Ni10	Coupling mounting base:	HT200
Up cover:	HT200	Motor casing:	HT200
Mechanical seal:			Double mechanical seaWQ-25

Working conditions

Medium temperature high(°C):	≤40	PH value of medium:	4 ~ 10
Max. liquid density(Kg/m^3):	1.3X10^{3}Kg/m^3	Max. ambient temperature(°C):	40
Max. Operating Pressure:	PN6	Volume ratio of solid phase:	0.03
Flange rating:	PN6	Max. immersion depth(m):	10

Pumped medium:
Handles household sewage, septic waste, construction water, and industrial waste with solids like fibers, paper, grass, and cloth

Installation

Coupling Model:	SW50-50(PN6)	Installation:	Wet installation
Outlet diameter(mm):	50	Connection standard:	Hose connection
Flange Standard:	GB/T 17241.6	Pipe Diameter(mm):	50
Installation form:	Vertical	Optional accessories:	Hose bend

Motor

Motor phase:	Three phase	Protection class:	IP68
Motor poles:	2	Insulation class:	F
Motor power(kW) :	4	Frequency(Hz):	50
Rated voltage(V):	380	Rated current(A):	9
Power factor:	0.87	Drive end bearing:	6306
Non-drive end bearing:	6304	Cable length(m):	10
Outer diameter of stator(mm):	155	Starting current(A):	61

Weight/Packaging

Gross weight(kg):	53.9	Package size(mm):	874×284×364

Area Range Parameters

Max Q(m^3/h):	16.0	Allowable Minimum (m^3/h):	8.5
Allowable Maximum (m^3/h):	16.0	Min Value Optimal area (m^3/h):	8.4
Max Value Optimal area (m^3/h):	15.6		

Performance Curve

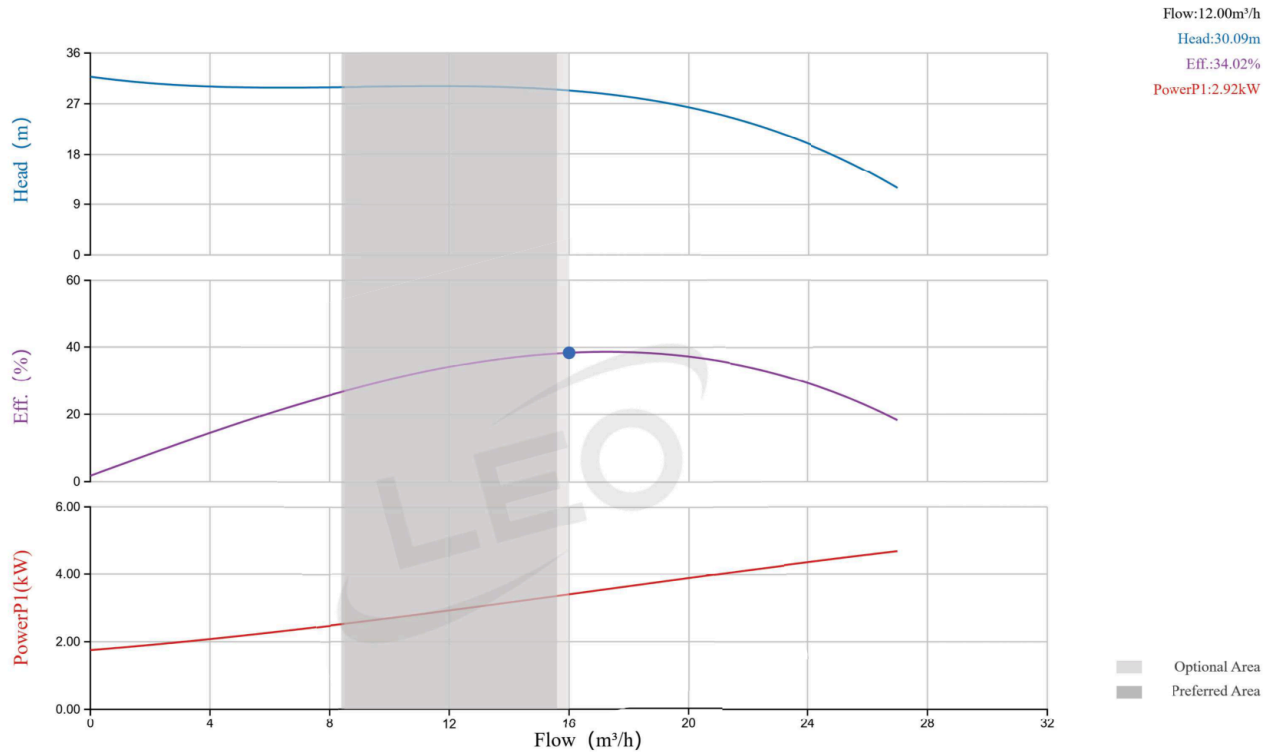

Basic Parameters

	Pump flow rate(m^3/h)	Total manometric head H(m)	Overall efficiency(%)	Pump power input(kW)
Rated Point	12.00	30.00	34.12	2.924
Work Point	12.00	30.09	34.02	2.92
Minimum Allowed Point	8.50	29.95	26.94	2.52
Maximum Allowed Point	16.00	29.32	38.39	3.40
Optimal Working Area (Small)	8.40	29.94	26.70	2.51
Optimal Working Area (Large)	15.60	29.48	38.18	3.35

Shape & Size

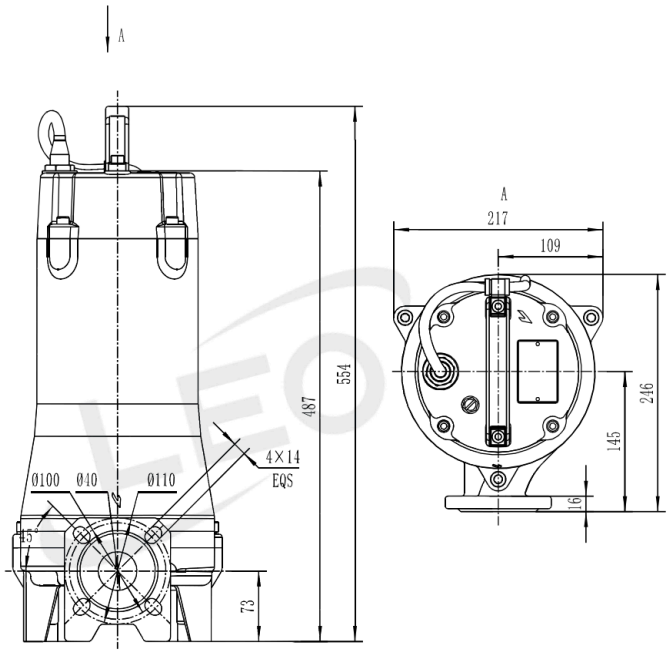

Exploded View

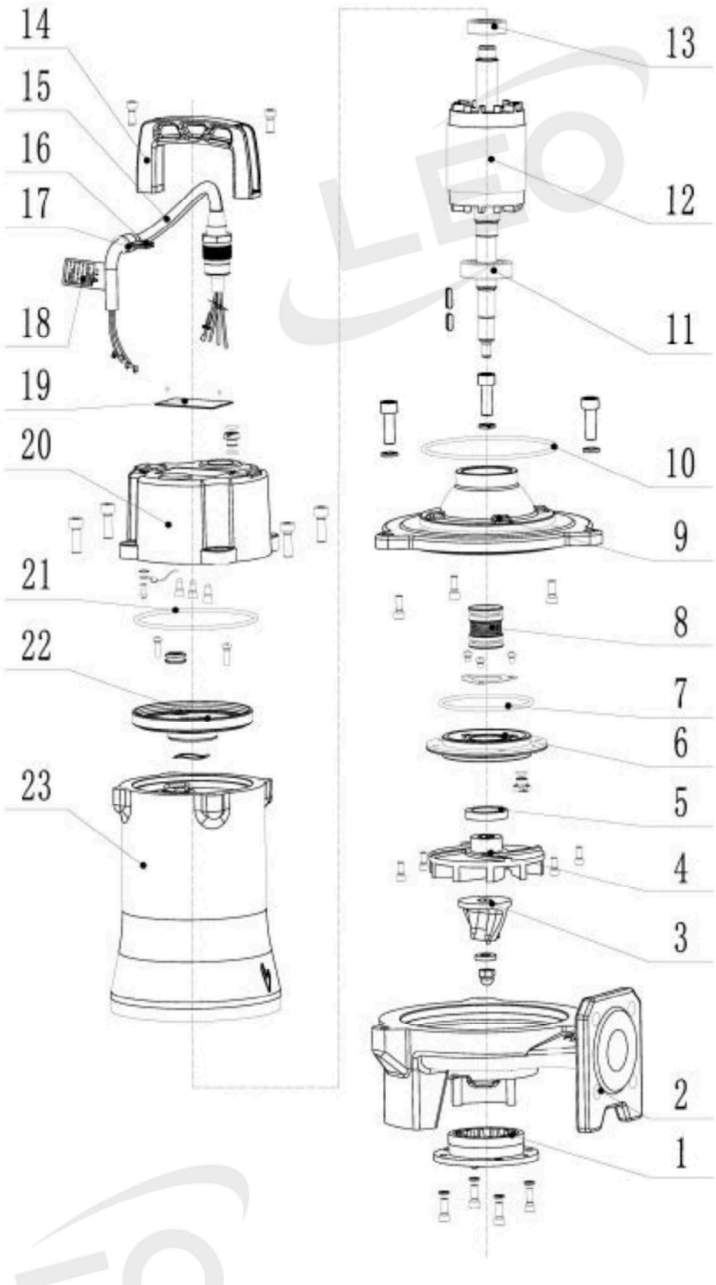

№	Part Name	Material
23	Stator	
22	Upper bearing cover	HT200
21	O_sealing ring	NBR
20	Top cover	HT200
19	nameplate	304
18	Warning label	
17	Cable clamp	304
16	Cable protective case	NBR
15	Cable Assembly	
14	Handle	ZG45
13	Bearing	
12	Rotor	
11	Bearing	
10	O_sealing ring	NBR
9	oil chanber	HT200
8	Double mechanical seal	
7	O_sealing ring	NBR
6	Pump cover	HT200
5	Skeleton oil seal	
4	Impeller	HT200
3	Cutting knife	108Cr17
2	Pump body	HT200
1	Cutting holder	108Cr17

LEO PUMP GROUP CO.,LTD.

Headquarter Address:
No.505,23rd Street,Qiantang District,Hangzhou,Zhejiang,310020, P.R.China

Base Address:
No.1,3rd Street,East Industry Center, Wenling,Zhejiang,317511,P.R.China
No.9 Jiuhua Road,Jiuhua Eco-Tec Development Area,Yuhu District,Xiangtan,Hunan,411202,P.R.China
No.19 Changshun Road,Changcheng Street,Lushunkou District,Dalian,Liaoning,116049,P.R.China

www.leopump.com export@leopump.com
+86-576-8998 6556 +86-576-8998 9898

Exploring More by Scanning!

✱ LEO reserves all the right of products modification without prior notification