Reliable Partner on Intelligent Fluid Solutions

PRODUCT SELECTION REPORT

Model:XST40-200/55
Name:End Suction Centrifugal Pump



LEO GROUP PUMP CO.,LTD.

2026.2.14

Project Name:	Koslan		
Personal Name:	Koslan	**Company Name:**	
Company Address:			
Website:	www.leopump.com	**Product Model:**	XST40-200/55
Company Name:			LEO GROUP PUMP CO., LTD.

Product Recommendations

Flow(m^3/h): 29 **Head(m):** 37 **Power(kW):** 5.5

Based on provided information and product parameters, LEO PUMP recommends model:
XST40-200/55

Introduction

Application
Circulation and transfer of clean, chemically non-aggressive water andother liquids;
Water supply & irrigation;
Water circulation in air conditioning systems;
Fire fighting system;

Operating Conditions
Delivery: up to 210 m3/h;
Head: up to 95 m;
Liquid temperature: Standard -10°Cto 85°C;
Maximum operating pressure: 12 bar (PN12)Anti-clockwise rotation when facing pump's suction port
Impeller: AISI304，HT200;
Mechanical seal in compliance with DIN 24960
Lubricated by internal recirculating pumped liquid; Counter flange available on request.

Product Parameters

Nameplate

Pump flow rate(m^3/h):	29	Total manometric head H(m):	37
Overall efficiency(%):	67.6	Speed(rpm):	2900

Technical

Motor power(kW):	5.5	Shaft Power(kW):	4.33
Curve tolerance:	ISO9906 AppendixA	Maximum lift(m):	44
Minimum usage flow(m^3/h):	2.9	Maximum use flow(m^3/h):	45
Impeller diameter(mm):	189		

Material

Impeller:	HT200	Pump body:	HT200
Chassis:	ADC12	Rear end cover:	ADC12

Bracket:	HT200
Mechanical seal:	Single mechanical seal20-22

Working conditions

Max. ambient temperature(°C):	40	Max. liquid temperature(°C):	85
Max. Operating Pressure:	12bar		
Pumped medium:	Water or other liquids similar to water		

Installation

Inlet&Outlet Diameter:	65-40	Connection standard:	Flange connection

Motor

Motor phase:	Three phase	Protection class:	IP54
Motor poles:	2	Insulation class:	F
Motor power(kW) :	5.5	Frequency(Hz):	50
Rated voltage(V):	380	Rated current(A):	11.5
Drive end bearing:	6306	Non-drive end bearing:	6206
Starting current(A):	114		

Weight/Packaging

Gross weight(kg):	73	Package size(mm):	615*325*455

Area Range Parameters

Max Q(m^3/h):	45.0	Allowable Minimum (m^3/h):	2.9
Allowable Maximum (m^3/h):	45.0	Min Value Optimal area (m^3/h):	26.1
Max Value Optimal area (m^3/h):	31.9		

Performance Curve

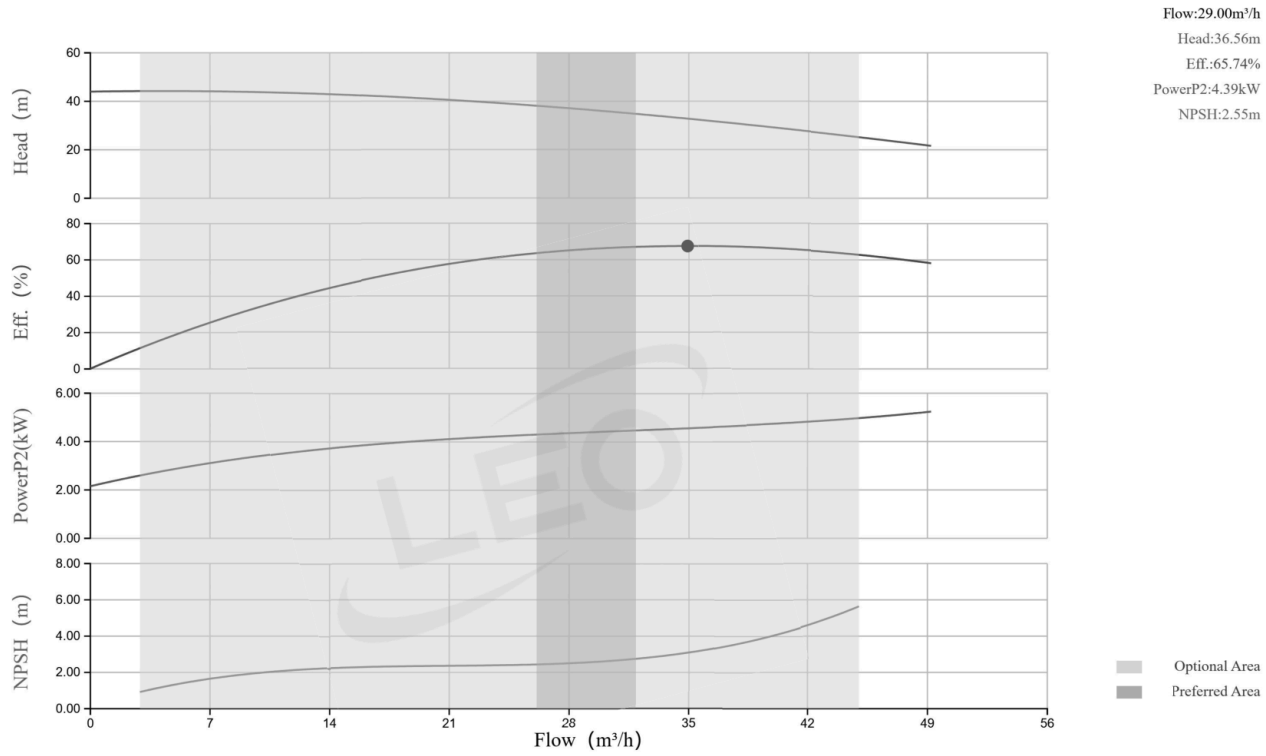

Basic Parameters

	Pump flow rate(m^3/h)	Total manometric head H(m)	Pump efficiency(%)	Shaft power (kW)	NPSHr(m)
Rated Point	29.00	37.00	67.6	4.33	2.55
Work Point	29.00	36.56	65.74	4.39	2.55
Minimum Allowed Point	2.90	44.21	11.42	2.59	0.91
Maximum Allowed Point	45.00	25.18	62.78	4.96	5.63
Optimal Working Area (Small)	26.10	38.12	63.61	4.30	2.43
Optimal Working Area (Large)	31.90	34.76	67.07	4.47	2.74

Shape & Size

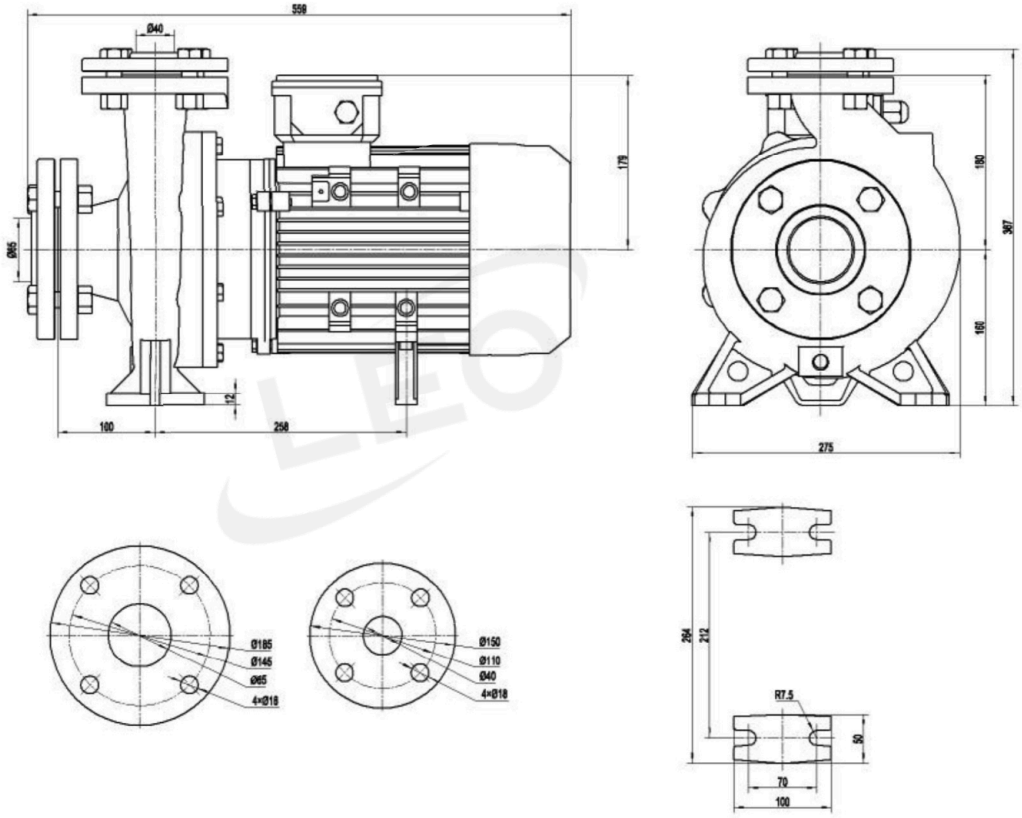
559
Ø40
178
Ø65
12
100
258
160
307
160
275
Ø185
Ø145
Ø65
4×Ø18
Ø150
Ø110
Ø40
4×Ø18
294
212
R7.5
50
70
100

Exploded View

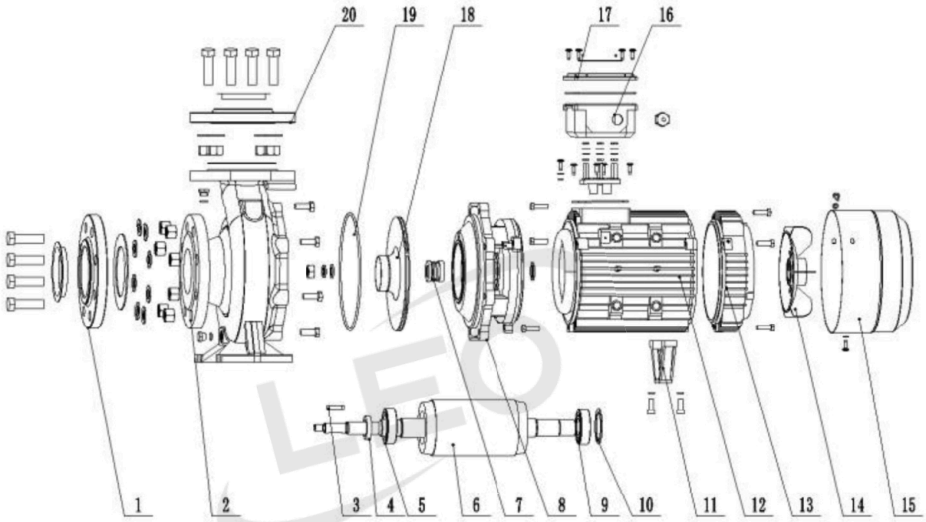

No.	Name	Material
	Part Name	
20	lange	HT200
19	O-ring	NBR
18	Impeller	AISI304
17	Terminal box cover	
16	Terminal box	ADC12
15	Fan cover	08F
14	Fan	PP
13	Rear cover	ADC12
12	Stator	
11	Motor support	HT200
10	Wave spring	65Mn
9	Bearing	
8	Connector	HT200
7	Mechanical seal	
6	Rotor	
5	Bearing	
4	Framework sealing	
3	Key	AISI304
2	Pump inlet	HT200
1	lange	HT200

LEO PUMP GROUP CO.,LTD.

Headquarter Address:
No.505,23rd Street,Qiantang District,Hangzhou,Zhejiang,310020, P.R.China

Base Address:
No.1,3rd Street,East Industry Center, Wenling,Zhejiang,317511,P.R.China
No.9 Jiuhua Road,Jiuhua Eco-Tec Development Area,Yuhu District,Xiangtan,Hunan,411202,P.R.China
No.19 Changshun Road,Changcheng Street,Lushunkou District,Dalian,Liaoning,116049,P.R.China

www.leopump.com export@leopump.com
+86-576-8998 6556 +86-576-8998 9898

Exploring More by Scanning!

✱ LEO reserves all the right of products modification without prior notification