Operation Manual

BPD Series Solar Pumping Inverter



SHENZHEN INVT ELECTRIC CO., LTD.

Preface

BPD series solar pumping inverters are developed for outdoor solar power supply of water pumps based on the core control algorithm of Goodrive series high-performance inverters and the requirements of solar pumping application and control. They provide multiple control and protection functions, such as tracking the maximum power, hibernating at weak light, waking up at strong light, hibernating at high water-level, and underload protection. The solar power supply can be automatically switched to grid power supply as required by customers to ensure the proper operation of the water pumps.

See the commissioning guide in this manual when performing commissioning on the inverter.

If the product is ultimately used for military affairs or manufacture of weapon, it will be listed on the export control formulated by ***Foreign Trade Law of the People's Republic of China***. Rigorous review and necessary export formalities are needed when they are exported.

Our company reserves the right to update the information of our products without prior notice.

Contents

Preface ..... **i**
Contents ..... **ii**
1 Safety precautions **1**
1.1 Safety definition 1
1.2 Warning symbols 1
1.3 Safety guidelines 2
1.3.1 Delivery and installation 2
1.3.2 Commissioning and running 3
1.3.3 Maintenance and replacement of components 3
1.3.4 Waste disposition 4
2 Product overview **5**
2.1 Product specifications 5
2.2 Name plate 7
2.3 Model description 7
2.4 Power levels 8
2.5 Control circuit wiring and terminals 8
2.5.1 Wiring diagram of the control circuit 8
2.5.2 Terminal arrangement 9
2.5.3 Instruction of power terminals 12
2.5.4 Description of function terminals 13
2.6 Dimensions and installation 14
2.7 Keypad operation procedure 17
2.7.1 Keypad introduction 17
2.7.2 Keypad displaying 19
2.7.3 Keypad operation 20
3 Function parameters **23**
3.1 Parameters of common functions 23
3.2 Special function parameters 34
4 Fault diagnosis and solution **44**
5 Installation guide **49**
5.1 Unpacking inspection 49
5.2 Preparation for installation 49
5.2.1 Installation location 49
5.2.2 Cable specifications 50
5.3 Mechanical installation 51
5.4 Electrical installation 52
5.4.1 Communication terminal installation 53
5.4.2 Installation of AC input and output terminals 55

5.4.3 GPRS module installation 56
5.5 Inspection before operation 58
5.6 Description of LED indicators 58
6 Commissioning guide 59
6.1 Commissioning on solar power supply 59
6.2 Commissioning on grid power supply 60
6.3 Commissioning on automatic switching between solar and grid power supply 62
6.4 Advanced settings 63
6.5 Flow chart of the commissioning 65
6.6 Simple parameter setting overview 66
Appendix A Recommended solar array configuration 67
Appendix B Energy efficiency data 68

1 Safety precautions

Read this manual carefully and follow all the safety precautions before moving, installing, operating, and servicing the inverter. Otherwise, physical injury or death or damage to the devices may be caused.

If any physical injury or death or damage to the devices caused by you or your customers due to your neglect of the safety precautions in the manual, our company shall not be held liable.

1.1 Safety definition

Danger:	Serious physical injury or even death may occur if related requirements are not followed.
Warning:	Physical injury or damage to the devices may occur if related requirements are not followed.
Note:	Steps to take for ensuring the proper running of the inverter.
Trained and qualified electricians	People working on the device must have taken part in professional electrical and safety training, obtained the certification, and been familiar with all steps and requirements of installing, commissioning, operating, and maintaining the device, and are capable of preventing or dealing with all kinds of emergencies.

1.2 Warning symbols

Warning signs are used to warn you about the conditions that may cause severe injury or damage to the device. They instruct you to exercise caution to prevent danger. The following table describes the warning signs used in this manual.

Symbols	Name	Instruction	Abbreviation
Danger	Danger	Serious physical injury or even death may occur if related requirements are not followed.	
Warning	Warning	Physical injury or damage to the devices may occur if related requirements are not followed.	
Electrostatic discharge	Electrostatic discharge	Damage to the PCBA board may occur if related requirements are not followed.	
Hot sides	Hot sides	Sides of the device may become hot. Do not touch.	
Note	Note	Steps to take for ensuring the proper running of the device.	Note

1.3 Safety guidelines



- ✧ Only qualified electricians are allowed to operate the inverter.
- ✧ Do not carry out any wiring or inspection or change components when the power supply is applied. Ensure that all the input power supplies are disconnected before wiring and checking, and always wait at least the time designated on the inverter or until the DC bus voltage is lower than 36 V. The following table describes the waiting time.

inverter model		Min. waiting time
220 V	0.75 kW–4 kW	5 minutes
380 V	2.2 kW–5.5 kW	5 minutes



- ✧ Do not refit the inverter unauthorizedly. Otherwise, fire, electric shocks, or other injury may be caused.



- ✧ The base of the radiator may become hot when the device is running. Do not touch it. Otherwise, you may get burnt.



- ✧ The electrical parts and components inside the inverter are electrostatic. Take measurements to avoid electrostatic discharge when performing operation involved with them.

1.3.1 Delivery and installation



- ✧ Install the inverter on noncombustibles and keep the inverter away from inflammables.
- ✧ Do not operate the inverter when it is damaged or any of its components are lost.
- ✧ Do not touch the inverter with wet items or body. Otherwise, electric shocks may occur.

Note:

- ✧ Use proper handling and installation tools to avoid damage to the device or physical injury. Installers must take mechanical protective measures, such as wearing anti-smashing shoes and working uniforms, to protect personal safety.
- ✧ Do not carry the inverter by its cover. The cover may fall off.
- ✧ Do not open the cover plates of the inverter. Only professional technicians are allowed to perform such operation.
- ✧ Ensure that no physical impact or vibration occurs on the product during its transport and installation.
- ✧ Install the product in a place that will prevent children or other people from touching it.

- ✧ The leakage current of the product may be larger than 3.5 mA during operation. Perform reliable grounding and ensure that the grounding resistance is lower than 10 Ω. The conductivity of PE grounding conductor is the same as that of the phase conductor (with the same cross sectional area).
- ✧ DC INPUT is the solar input terminal, AC INPUT is the power input terminal, and AC OUTPUT is the motor output terminal. Connect the input power cable and motor cable properly. Otherwise, damage to the inverter may be caused.
- ✧ Before connecting the 1PH AC grid cable to the inverter, take protection measures such as the lightning protection and short circuit protection according to the local electrical safety standard.
- ✧ The distance between the DC output line of the solar panel and the DC terminal of the inverter cannot exceed 10 meters. Otherwise, measures need to be taken to prevent overvoltage.

1.3.2 Commissioning and running

	✧ Before performing terminal wiring, disconnect all the power supplies of the inverter and wait at least 5 minutes. ✧ The voltage inside the inverter is high when it is running. Do not perform any operation except keypad-based setting. ✧ The inverter may automatically start when P01.21=1. Do not get close to the inverter and motor. ✧ The inverter cannot be used as an "Emergency-stop device".

Note:

- ✧ Do not switch on/off the input power supply of the inverter frequently.
- ✧ For inverters that have been stored for a long time, check it, adjust the capacitance and perform a test run before using it.
- ✧ Cover the front cover plate before the running of the inverter. Otherwise, electric shocks may be caused.

1.3.3 Maintenance and replacement of components

	✧ Only qualified electricians are allowed to perform the maintenance, inspection, and component replacement on the inverter. ✧ Before performing terminal wiring, disconnect all the power supplies of the inverter and wait at least 5 minutes. ✧ Take measures to prevent screws, cables and other conductive matters from falling into the inverter during maintenance and component replacement.

Note:

- ✧ Use proper torque to tighten screws.
- ✧ Keep the inverter, parts, and components away from inflammables during maintenance and component replacement.
- ✧ Do not carry out any isolation and voltage withstanding test on the inverter, and do not measure the control circuit of the inverter by megameter.

1.3.4 Waste disposition

	✧ There is heavy metal in the product. Deal with it as industrial waste.
	✧ When the life cycle ends, the product should enter the recycling system. Dispose of it separately at an appropriate collection point instead of placing it in the normal waste stream.

2 Product overview

2.1 Product specifications

Model	BPD0K7 TN(AC)	BPD1K5 TN(AC/A CS)	BPD2K2 TN(AC/A CS)	BPD004 TNAC(S)	BPD2K2 TRAC(S)	BPD004 TRAC(S)	BPD5K5 TRAC(S)
DC input							
Maximum DC voltage (V)	450				800		
Starting voltage (V)	80	100			220		
Minimum working voltage (V)	60	80			180		
Recommended MPPT voltage (V)	80–400	100–400			220–750		
Number of input channels	1/MC4 connector			2/MC4 connector	1/MC4 connector	2/MC4 connector	
Maximum input DC current (A)	9	12	12	20	12	20	20
Bypass AC input (supporting mains input)							
Input voltage (V AC)	220/230/240(1PH) (-15%–+10%)				380 (3PH) (-15%–+10%)		
Input frequency (Hz)	47–63						
AC input terminal	L, N, PE				R, S, T, PE		
AC output							
Rated power (W)	750	1500	2200	4000	2200	4000	5500
Rated current (A)	5.1 (1PH) 4.2 (3PH)	10.2 (1PH) 7.5 (3PH)	14 (1PH) 10 (3PH)	25 (1PH) 16 (3PH)	5.5	9.5	14
Output voltage (V AC)	0–Input voltage						
Output wiring mode	1P2L: 1PH motor 1PH control 2P3L: 1PH motor 2PH control 3P3L: Connected to a 3PH asynchronous motor				3P3L: Connected to a 3PH asynchronous motor		

Model	BPD0K7 TN(AC)	BPD1K5 TN(AC/A CS)	BPD2K2 TN(AC/A CS)	BPD004 TNAC(S)	BPD2K2 TRAC(S)	BPD004 TRAC(S)	BPD5K5 TRAC(S)
Output frequency (Hz)	1–400						
Control performance							
Control mode	V/F						
Motor type	Asynchronous motor (1PH/3PH)				Asynchronous motor (3PH)		
Other parameters							
Ingress protection rating	IP65						
Cooling	Natural cooling						
HMI	External LED keypad						
Communication terminals							
External communication	RS485/3 digital inputs						
Communication interface	Multi-lead waterproof connector						
Certification							
Standards	CE; EMC meets the requirements of IEC61800-3 C3.						
Operating environment							
Ambient temperature	-25–60°C (derated at temperature higher than 45°C)						
Altitude	Below 3000 m (derated at altitude higher than 2000 m)						

2.2 Name plate

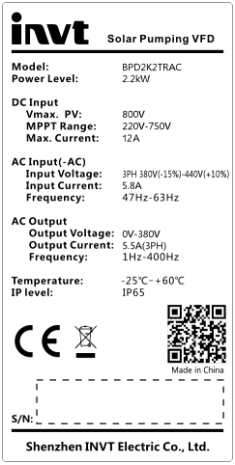

2.3 Model description

BPD XKX TN AC(S)

① ② ③ ④

No.	Field	Field description	Naming rule
①	BPD	Product series name	Name of the solar pumping inverter series
②	XKX	AC output power	Rated AC output power 1K5: 1500W 005: 5000W
③	TN	Technical type	TL: 1PH TR: 3PH 380VAC TN: 1PH/3PH 220VAC
④	AC(S)	Extension code	Empty: standard model; AC: AC input is supported; ACS: AC input is provided and a DC switch is configured.

2.4 Power levels

BPDXKXTN(AC/ACS)	0K7	1K5	2K2	004
Rated output power (kW)	0.75	1.5	2.2	4
Max. DC input current (A)	9	12	12	20
Rated AC input current—AC(S) model (A)	9.3	15.7	24	38
Rated output current (A)	5.1 (1PH) 4.2 (3PH)	10.2 (1PH) 7.5 (3PH)	14 (1PH) 10 (3PH)	25 (1PH) 16 (3PH)

BPDXKXTRAC(S)	2K2	004	5K5
Rated output power (kW)	2.2	4	5.5
Max. DC input current (A)	12	20	20
Rated AC input current—AC(S) model (A)	5.8	13.5	19.5
Rated output current (A)	5.5	9.5	14

2.5 Control circuit wiring and terminals

2.5.1 Wiring diagram of the control circuit

The COM interfaces are the control circuit interfaces, including one 485 communication channel and three digital input channels. Figure 2-1 shows the wiring. For interface definitions and specifications, see section 2.5.4 "Description of function terminals".

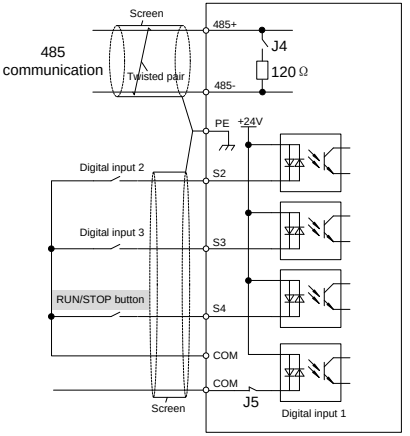

Figure 2-1 Control circuit wiring diagram

Note: For models of BPD2K2–5K5TRAC(S), the RUN/STOP button on the enclosure corresponds to the S4 terminal.

2.5.2 Terminal arrangement

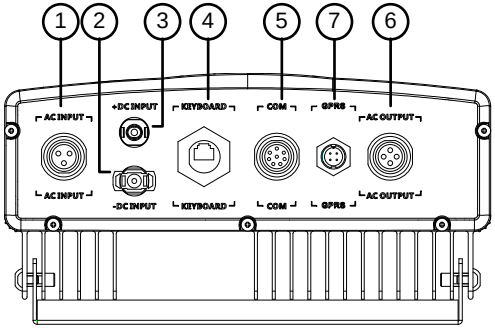

(a) BPD0K7–2K2TN(AC) terminals

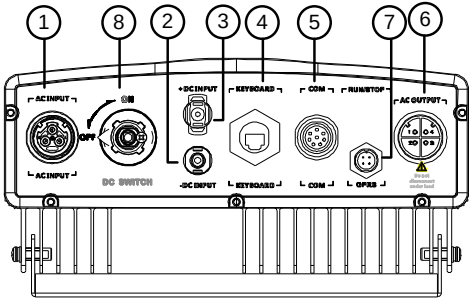

(b) BPD1K5–2K2TNACS terminals

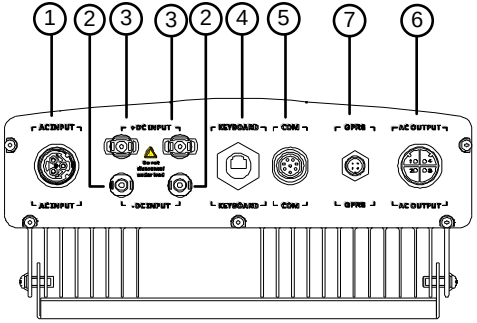

(c) BPD004TNAC terminals

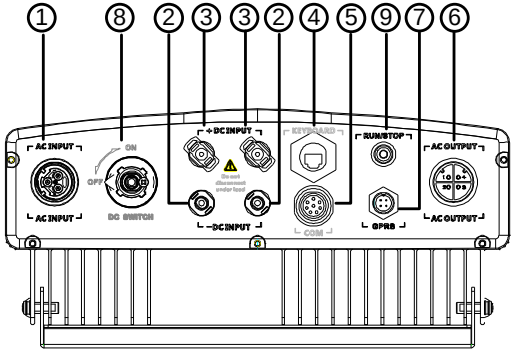

(d) BPD004TNACS terminals

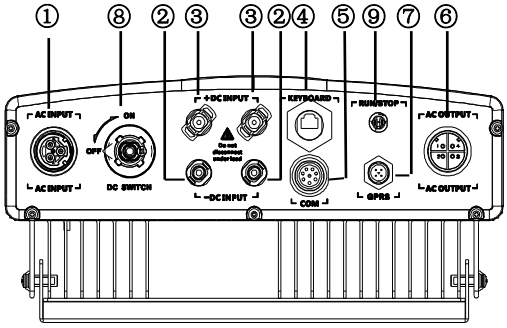

(e) BPD2K2–5K5TRAC(S) terminals

Figure 2-2 Wiring terminal arrangement

No.	Terminal name		Pin definition
①	AC input terminal (AC model)	-TN model	1. L
			2. N
			3. PE
		-TR model	1. R
			2. S
			3. T
			4. PE
②	Solar input terminal-		-DC INPUT
③	Solar input terminal+		+DC INPUT
④	External keypad terminal		RJ45
⑤	Function terminal		1. 485+
			2. 485-
			3. S2
			4. S3
			5. COM
			6. S4*
			7. COM
			8. PE
⑥	AC output terminal		1. V
			2. W
			3. U
			4. PE

No.	Terminal name	Pin definition
⑦	GPRS connection terminal	1. + 5V
		2. 485+
		3. 485-
		4. GND
⑧	DC switch	/
⑨	RUN/STOP button	/

Note*: For the models of BPD2K2–5K5TRAC(S), Pin6 does not provide any functions.

2.5.3 Instruction of power terminals

1. ① is an AC input terminal and the model supporting mains input provides this terminal. (**Note:** For safety, ensure that PE is properly connected.)

2. ⑥ is an AC output terminal connected to the water pump motor. When using a 3PH motor, connect U, V and W of the motor to U, V and W of the inverter, and connect the motor enclosure to PE of ⑥.

3. The wiring varies with control modes if a 1PH motor is used:

(1) 1PH control: Connect the motor phase line to U and W of inverter terminal ⑥, connect the motor enclosure to the PE pin. There is no need to remove the starting capacitor and the wiring is easy. But the starting performance is not as good as that in 2PH control mode, so this wiring mode is applicable only to some motors.

(2) 2PH control: It is necessary to remove the starting capacitor and operation capacitor (if any). The wiring of a general motor is shown in Figure 2.3: L1 is the running winding, L2 is the starting winding, C1 is the running capacitor, C2 is the starting capacitor, and when the motor speed exceeds 75% of the rated speed, the starting capacitor is switched off through the centrifugal switch K.

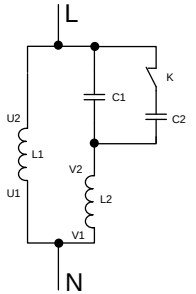

Figure 2-3 Internal wiring of the 1PH motor with starting and running capacitors

Figure 2-4 shows the internal wiring after the starting and running capacitors are removed.

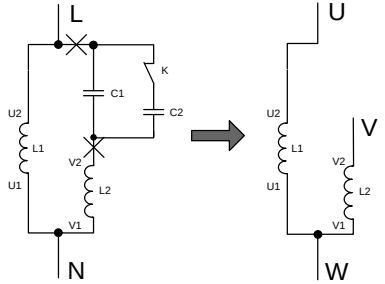

Figure 2-4 Wiring of a 1PH motor in 2PH control mode

U1 and V1 are the common terminal of the windings, and connect with the W output of the solar pumping inverter, U2 of the running winding connect with the U output of the solar pumping inverter, and V2 of the starting winding connect with the V output of the solar pumping inverter.

The operation direction of the motor can be changed by changing the V voltage phase through the tens place of P04.34. After the forward direction is adjusted, the operation direction can be changed through P00.13.

2.5.4 Description of function terminals

Terminal name	Description	
PE	Grounding terminal	
COM	+24V common terminal	
S2	Digital input 2	1. Internal impedance: 3.3kΩ 2. Applicable to 12–30V voltage input 3. Supporting NPN wiring 4. Max. input frequency: 1 kHz 5. All are programmable digital input terminal. Users can set terminal functions through function codes. 6. S1 is short circuited with COM in the inverter by default and it is not connected externally. **Note:** The RUN/STOP button is provided only on –TR models, and S4 is used.
S3	Digital input 3	
S4	Digital input 4 (Used by the RUN/STOP button)	

Terminal name	Description
485+	485 communication interface If it is a standard 485 communication interface, use twisted pairs or shielded cables. **Note:** When a GPRS module is used, the 485 communication interface is not available. If 485 communication is required, you need to remove the GPRS module.
485-	

2.6 Dimensions and installation

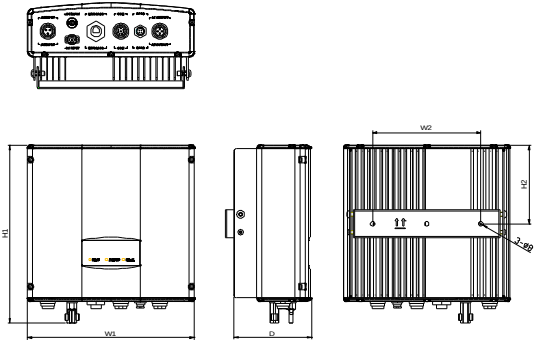

Figure 2-5 Dimensions of BPD0K7TN(AC)–BPD2K2TN(AC)
(Unit: mm)

Model	H1	W1	D	H2	W2	Installation hole	Net weight (kg)	Package weight (kg)
BPD0K7TN(AC)	294	300	139.5	128.5	195	Ø8	6.6	8.7
BPD1K5TN(AC)	319	300	139.5	141	195	Ø8	7.2	9.2
BPD2K2TN(AC)	319	300	139.5	141	195	Ø8	7.2	9.2

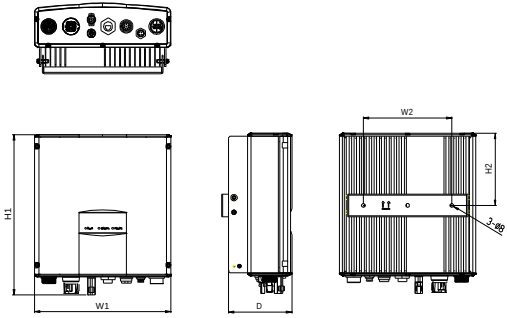

Figure 2-6 Dimensions of BPD0K7–BPD2K2TNACS
(Unit: mm)

Model	H1	W1	D	H2	W2	Installation hole	Net weight (kg)	Package weight (kg)
BPD1K5TNACS	351	300	139.5	158	195	Ø8	8	9.5
BPD2K2TNACS	351	300	139.5	158	195	Ø8	8	9.5

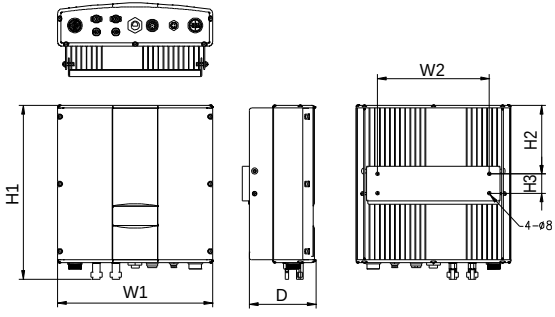

Figure 2-7 Dimensions of BPD004TNAC
(Unit: mm)

Model	H1	W1	D	H2	W2	H3	Installation Hole	Net weight (kg)	Package weight (kg)
BPD004TNAC	410	360	154.5	159	260	45	Ø8	13.2	16

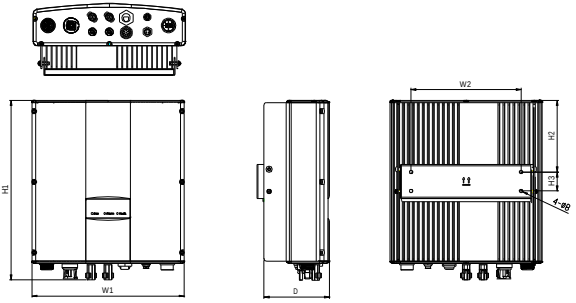

Figure 2-8 Dimensions of BPD004TNACS

(Unit: mm)

Model	H1	W1	D	H2	W2	H3	Installation Hole	Net weight (kg)	Package weight (kg)
BPD004TNACS	426	360	154.5	170	260	45	Ø8	13.2	15.2

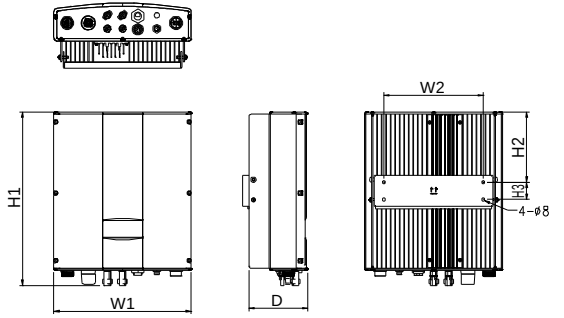

Figure 2-9 Dimensions of BPD2K2–5K5TRAC(S)

(Unit: mm)

Model	H1	W1	D	H2	W2	H3	Installation Hole	Net weight (kg)	Package weight (kg)
BPD2K2TRAC(S)	331	360	154.5	122.5	260	45	Ø8	10.1	12
BPD004TRAC(S)	454	360	154.5	184	260	45	Ø8	14.1	16
BPD5K5TRAC(S)	454	360	154.5	184	260	45	Ø8	14.1	16

2.7 Keypad operation procedure

2.7.1 Keypad introduction

The keypad is used to control the solar pumping inverter, read the state data and adjust parameters.

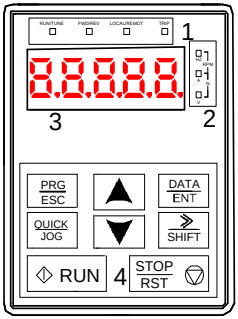

Figure 2-10 External keypad

No.	Name	Description	
1	Status indicator	RUN/TUNE	Running status indicator. LED off means that the inverter is in the stopping state; LED blinking means the inverter is in the parameter autotuning state; LED on means the inverter is in the running state.
		FWD/REV	FED/REV indicator. LED off means the inverter is in the forward rotation state; LED on means the inverter is in the reverse rotation state
		LOCAL/REMOT	LED for keypad operation, terminals operation and remote communication control; LED off means that the inverter is in the keypad operation state; LED blinking means the inverter is in the terminals operation state; LED on means the inverter is in the remote communication control state.
		TRIP	Fault indicator. LED on when the inverter is in the fault state; LED off in normal state; LED blinking means the inverter is in the overload pre-alarm state.

<table>
<tr><th>No.</th><th>Name</th><th colspan="4">Description</th></tr>
<tr><td>2</td><td>Unit indicator</td><td colspan="4">Indicating the unit of the displayed digits
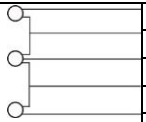
Hz — Unit of frequency
A — Unit of current
V — Unit of voltage
RPM — Unit of rotating speed
% — Percentage</td></tr>
<tr><td>3</td><td>Code displaying zone</td><td colspan="4">5-digit LED display, displaying various monitoring data and alarm code such as set frequency and output frequency.
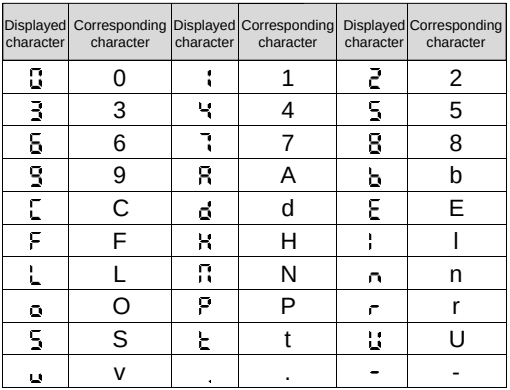
Displayed character / Corresponding character / Displayed character / Corresponding character / Displayed character / Corresponding character
0 0 1 1 2 2
3 3 4 4 5 5
6 6 7 7 8 8
9 9 A A b b
C C d d E E
F F H H I I
L L N N n n
O O P P r r
S S t t U U
v v . . - -</td></tr>
<tr><td>4</td><td>Analog potentiometer</td><td colspan="4">Corresponds to AI1.</td></tr>
<tr><td>5</td><td>Buttons</td><td>PRC ESC</td><td>Programming key</td><td colspan="2">Enter or escape from the first level menu and remove the parameter quickly</td></tr>
<tr><td></td><td></td><td>DATA ENT</td><td>Entry key</td><td colspan="2">Enter the menu step-by-step
Confirm parameters</td></tr>
<tr><td></td><td></td><td>▲</td><td>UP key</td><td colspan="2">Increase data or function code progressively</td></tr>
<tr><td></td><td></td><td>▼</td><td>DOWN key</td><td colspan="2">Decrease data or function code progressively</td></tr>
</table>

No.	Name	Description		
		» SHIFT	Right-shift key	Move right to select the displaying parameter circularly in stopping and running mode. Select the parameter modifying digit during the parameter modification
		RUN	Run key	This key is used to run the inverter in key operation mode
		STOP RST	Stop/ Reset key	This key is used to stop the inverter when it is in running state, and is limited by function code P07.04. This key is used to reset all control modes in the fault alarm state
		QUICK JOG	Quick key	The function of this key is determined by function code P07.02.

2.7.2 Keypad displaying

The display status of BPD series solar pumping inverter keypads includes stop state parameter display, running state parameter display, function code parameter editing state display, fault alarm state display, and so on.

2.7.2.1 Stop state parameter display

When the inverter is in the stop state, the keypad displays stop state parameters. The stop state parameters displayed by default include the set frequency, bus voltage, input terminal state, and output terminal state. You can press 》/SHIFT to shift the display of the selected parameters form left to right.

2.7.2.2 Running state parameter display

After receiving a valid running command, the inverter enters the running state and the keypad displays the running state parameters. The RUN/TUNE indicator on the keypad is on, while the state of FWD/REV is determined by the current running direction.

In the running state, the parameters displayed by default include the running frequency, set frequency, bus voltage, output voltage, output current, and pump rotating speed. You can press 》/SHIFT to shift the display of the selected parameters form left to right, and press QUICK/JOG (P07.02=2) to shift that from right to left.

2.7.2.3 Fault state display

If the inverter detects a fault signal, it enters the fault pre-alarm display state. The keypad displays the fault code while flicking, and the TRIP indicator on the keypad is on. When a fault occurs, the inverter attempts to perform auto reset for five times by default. If the fault persists, the fault code remains displayed. You can reset the inverter through the STOP/RST key, control terminal, or communication command.

2.7.2.4 Function code editing state display

In the state of stopping, running or fault, press PRG/ESC to enter the editing state (if there is a password, see P07.00).The editing state is displayed on two levels of menu, and the order is: function code group/function code number→function code parameter, press DATA/ENT to enter the function parameter display state. In this state, press DATA/ENT to save the parameter settings or press PRG/ESC to exit.

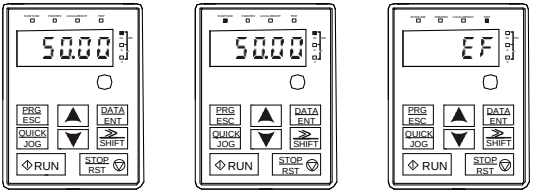

Stop state parameter display

Running state parameter display

Fault state display

Figure 2-11 Display in various states

2.7.3 Keypad operation

Operate the inverter via operation panel. For the detailed structure description of function codes, see section 3.1.

2.7.3.1 How to modify the function codes

The solar pumping inverter has three levels of menus, which are:

1. Group number of function code (first-level menu)

2. Tab of function code (second-level menu)

3. Set value of function code (third-level menu)

Remarks: Press both the PRG/ESC and the DATA/ENT can return to the second-level menu from the third-level menu. The difference is: pressing DATA/ENT will save the parameter settings into the control panel, and then return to the second-level menu and shift to the next function code automatically; while pressing PRG/ESC will directly return to the second-level menu without saving the parameter settings, and keep staying at the current function code.

Under the third-level menu, if the parameter has no flickering bit, it means the function code cannot be modified. The possible reasons could be:

(1) This function code is not modifiable parameter, such as actual detected parameter, operation records and so on;

(2) This function code is not modifiable in running state, but modifiable in stop state.

Example: Set function code P00.01 from 0 to 1.

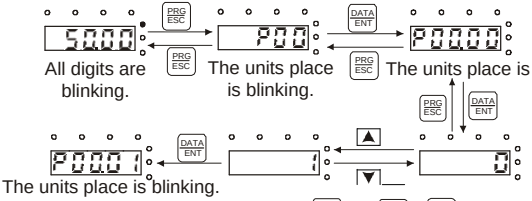

Note: When setting the value, you can press SHIFT and ▼ + ▲ to modify the value.

Figure 2-12 Parameter modification

2.7.3.2 How to set the password of the inverter

BPD series solar pumping inverters provide password protection function to users. Set P7.00 to gain the password and the password protection becomes valid instantly after quitting from the function code editing state. Press PRG/ESC again to the function code editing state, "0.0.0.0.0" will be displayed. Unless using the correct password, the operators cannot enter it.

Set P7.00 to 0 to cancel password protection function.

The password protection becomes valid instantly after retreating from the function code editing state. Press PRG/ESC again to the function code editing state, "0.0.0.0.0" will be displayed. Unless using the correct password, the operators cannot enter it.

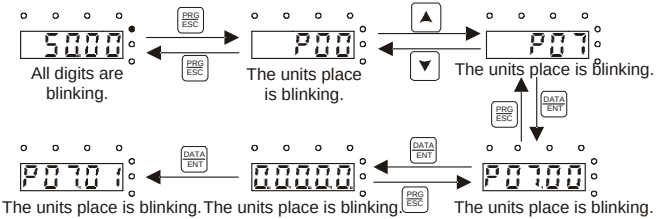

Note: When setting the value, you can press SHIFT and ▼ + ▲ to modify the value.

Figure 2-13 Password setting

2.7.3.3 How to watch the inverter state through function codes

BPD series solar pumping inverters provide group P17 as the state inspection group. Users can enter into P17 directly to watch the state.

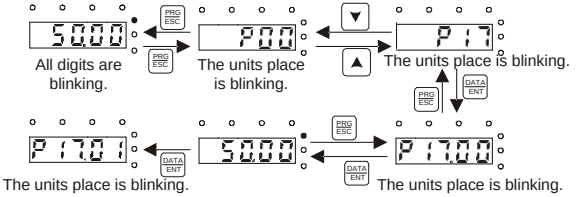

Note: When setting the value, you can press SHIFT and ▼ + ▲ to modify the value.

Figure 2-14 Parameter viewing

3 Function parameters

For the convenience of function codes setting, the function group number corresponds to the first level menu, the function code corresponds to the second level menu and the function code corresponds to the third level menu.

1. Below is the instruction of the function lists:

The first column "Function code": codes of function parameter group and parameters;

The second column "Name": full name of function parameters;

The third column "Detailed description": detailed illustration of the function parameters;

The forth column "Default": original factory settings of the parameters;

The fifth column "Modify": the modifying character of function codes (the parameters can be modified or not and the modifying conditions), below is the instruction:

"○": means the set value of the parameter can be modified on stop and running state;

"◎": means the set value of the parameter cannot be modified on the running state;

"●": means the value of the parameter is the real detection value which cannot be modified.

(In order to avoid mistakes, the modify attribute of each parameter is limited by the inverter)

3.1 Parameters of common functions

Function code	Name	Detailed description	Default	Modify
P00 Group Basic function group				
P00.00	Speed control mode	0: SVC 0 No need to install encoders. Suitable in applications which need low frequency, big torque for high accuracy of rotating speed and torque control. Related to mode 1, it is more suitable for the applications which need small power. 1: SVC 1 1 is suitable in high performance cases with the advantage of high accuracy of rotating speed and torque. It does not need to install pulse encoder. 2: SVPWM control 2 is suitable in applications which do not need high control accuracy, such as the load of fan and pump. One inverter can drive multiple motors.	2	◎

Function code	Name	Detailed description	Default	Modify
P00.01	Run command channel	Select the run command channel of the inverter. The control command of the inverter includes: start, stop, forward/reverse rotating, jogging and fault reset. 0: Keypad running command channel("LOCAL/REMOT" light off) Carry out the command control by RUN, STOP/RST on the keypad. Set the multi-function key QUICK/JOG to FWD/REVC shifting function (P07.02=3) to change the running direction; press RUN and STOP/RST simultaneously in running state to make the inverter coast to stop. 1: Terminal running command channel ("LOCAL/REMOT" flickering) Carry out the running command control by the forward rotation, reverse rotation and forward jogging and reverse jogging of the multi-function terminals 2: Communication running command channel ("LOCAL/REMOT" on); The running command is controlled by the upper monitor via communication	0	○
P00.03	Max. output frequency	This parameter is used to set the maximum output frequency of the inverter. Users need to pay attention to this parameter because it is the foundation of the frequency setting and the speed of acceleration and deceleration. Setting range: P00.04–400.00Hz	50.00Hz	◎
P00.04	Upper limit of the running frequency	The upper limit of the running frequency is the upper limit of the output frequency of the inverter which is lower than or equal to the maximum frequency. Setting range: P00.05–P00.03 (Max. output frequency)	50.00Hz	◎
P00.05	Lower limit of the running frequency	The lower limit of the running frequency is that of the output frequency of the inverter. The inverter runs at the lower limit frequency if the	0.00Hz	◎

Function code	Name	Detailed description	Default	Modify
		set frequency is lower than the lower limit. **Note:** Max. output frequency ≥ Upper limit frequency ≥ Lower limit frequency Setting range: 0.00Hz–P00.04 (Upper limit of the running frequency)		
P00.11	ACC time 1	ACC time means the time needed if the inverter speeds up from 0Hz to the Max. output frequency (P00.03).	Depend on model	○
P00.12	DEC time 1	DEC time means the time needed if the inverter speeds down from the Max. Output frequency to 0Hz (P00.03). BPD series inverters have four groups of ACC/DEC time which can be selected by P05. The factory default ACC/DEC time of the inverter is the first group. Setting range of P00.11 and P00.12:0.0–3600.0s	0.0s	○
P00.13	Running direction selection	0: Runs at the default direction, the inverter runs in the forward direction. FWD/REV indicator is off. 1: Runs at the opposite direction, the inverter runs in the reverse direction. FWD/REV indicator is on. Modify the function code to shift the rotation direction of the motor. This effect equals to the shifting the rotation direction by adjusting either two of the motor lines (U, V and W). The motor rotation direction can be changed by QUICK/JOG on the keypad. Refer to parameter P07.02. 2: Forbid to run in reverse direction: It can be used in some special cases if the reverse running is disabled.	0	○
P00.18	Function restore parameter	0: No operation 1: Restore the default value 2: Clear fault records **Note:** 1. The function code will restore to 0 after finishing the operation of the selected function code. 2. Restoring to the default value will cancel the	0	◎

Function code	Name	Detailed description	Default	Modify
		user password, please use this function with caution.		
P01 Group Start-up and stop control				
P01.08	Stop mode	0: Decelerate to stop: after the stop command becomes valid, the inverter decelerates to reduce the output frequency during the set time. When the frequency decreases to 0Hz, the inverter stops. 1: Coast to stop: after the stop command becomes valid, the inverter ceases the output immediately. And the load coasts to stop at the mechanical inertia.	0	○
P01.18	Operation protection	0: The terminal running command is invalid when powering on. 1: The terminal running command is valid when powering on.	1	○
P01.21	Restart after power off	0: Disabled 1: Enabled	1	○
P02 Group Motor 1 parameters				
P02.00	Motor type	0: 3PH motor 1: 1PH motor	Depend on mode	◎
P02.01	Rated power of asynchronous motor	0.1–3000.0kW	Depend on model	◎
P02.02	Rated frequency of asynchronous motor	0.01Hz–P00.03	50.00Hz	◎
P02.03	Rated speed of asynchronous motor	1–36000rpm	Depend on model	◎
P02.04	Rated voltage of asynchronous motor	0–1200V	Depend on model	◎

Set the parameter of the asynchronous motor. In order to ensure the controlling performance, set the P02.01–P02.05 according to the name plate of the asynchronous motor. Pumping inverters provide the function of parameter autotuning. Correct parameter autotuning comes from the correct setting of the motor name plate. In order to ensure the

Function code	Name	Detailed description		Default	Modify
P02.05	Rated current of asynchronous motor	0.8–6000.0A	controlling performance, please configure the motor according to the standard principles, if the gap between the motor and the standard one is huge, the features of the inverter will decrease. **Note:** When resetting the rated power of the motor (P02.01), you can initialize the motor parameter of P02.02–P02.10.	Depend on model	◎
P04 Group SVPWM control					
P04.00	V/F curve setting	These function codes define the V/F curve of BPD series motor 1 to meet the need of different loads. 0: Straight line V/F curve; applying to the constant torque load 1: Multi-dots V/F curve 2: Torque-stepdown V/F curve (power of 1.3) 3: Torque-stepdown V/F curve (power of 1.7) 4: Torque-stepdown V/F curve (power of 2.0) Curves 2–4 apply to the torque loads such as fans and water pumps. Users can adjust according to the features of the loads to get the best performance. 5: Customized V/F(V/F separation); in this mode, V can be separated from f and f can be adjusted through the frequency given channel set by P00.06 or the voltage given channel set by P04.27 to change the feature of the curve. **Note:** V_b in the below picture is the motor rated voltage and f_b is the motor rated frequency.		4	◎

Function code	Name	Detailed description	Default	Modify
		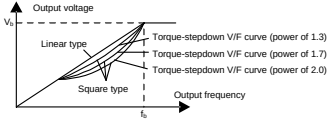		
P04.01	Torque boost	Torque boost to the output voltage for the features of low frequency torque. P04.01 is for the Max. output voltage Vb. P04.02 defines the percentage of closing frequency of manual torque to fb. Torque boost should be selected according to the load. The bigger the load is, the bigger the torque is. Too big torque boost is inappropriate because the motor will run with over magnetic, and the current of the inverter will increase to add the temperature of the inverter and decrease the efficiency. When the torque boost is set to 0.0%, the inverter is automatic torque boost. Torque boost threshold: below this frequency point, the torque boost is valid, but over this frequency point, the torque boost is invalid. 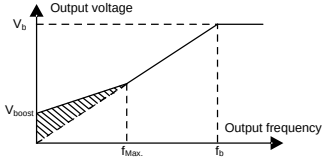 Setting range of P04.01: 0.0%:(automatic) 0.1%–10.0% Setting range of P04.02: 0.0%–50.0%	0.0%	○
P04.02	Torque boost close		20.0%	○
P04.03	V/F frequency point 1	If P04.00 =1, the user can set V//F curve by P04.03–P04.08 V/F is set to the motor load.	0.00Hz	○
P04.04	V/F voltage point 1	**Note:** V1 < V2 < V3, f1 < f2 < f3. If the low-frequency voltage is high, overtemperature	00.0%	○

Function code	Name	Detailed description	Default	Modify
P04.05	V/F frequency point 2	and burning may occur and the overcurrent stall and protection may occur to the solar inverter. 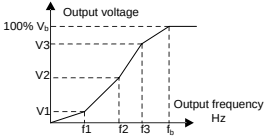 	00.00Hz	○
P04.06	V/F voltage point 2		00.0%	○
P04.07	V/F frequency point 3		00.00Hz	○
P04.08	V/F voltage point 3	Setting range of P04.03: 0.00Hz–P04.05 Setting range of P04.04: 0.0%–110.0% (rated voltage of motor 1) Setting range of P04.05: P04.03–P04.07 Setting range of P04.06: 0.0%–110.0%(rated voltage of motor 1) Setting range of P04.07: P04.05–P02.02(rated frequency of motor 1) or P04.05– P02.16(rated frequency of motor 1) Setting range of P04.08: 0.0%–110.0% (rated voltage of motor 1)	00.0%	○
P04.09	V/F slip compensation gain	This function code is used to compensate the change of the rotation speed caused by load during compensation SVPWM control to improve the rigidity of the motor. It can be set to the rated slip frequency of the motor which is counted as below: $\Delta f=f_b-n*p/60$ Of which, f_b is the rated frequency of the motor, its function code is P02.02; n is the rated rotating speed of the motor and its function code is P02.03; p is the pole pair of the motor. 100.0% corresponds to the rated slip frequency Δf. Setting range: 0.0–200.0%	0.0%	○
P04.34	2PH control of 1PH motor	Ones: 2PH control mode 0: Disabled; 1: Enabled Tens: Voltage of the secondary winding (V phase) reverse 0: Not reversed; 1: Reversed The setting range: 0–0x11	0x00	◎

Function code	Name	Detailed description	Default	Modify
P04.35	Voltage ratio of V and U	0.00–2.00	1.00	○
P05 Group Input terminals				
P05.01	S1 terminals function selection	0: No function 1: Forward rotation operation 2: Reverse rotation operation 3: 3-wire control operation 4: Forward jogging 5: Reverse jogging 6: Coast to stop 7: Fault reset 8: Operation pause 9: External fault input 10: Increasing frequency setting(UP) 11: Decreasing frequency setting(DOWN) 12: Cancel the frequency change setting 13: Shift between A setting and B setting 14: Shift between combination setting and A setting 15: Shift between combination setting and B setting 16: Multi-step speed terminal 1 17: Multi-step speed terminal 2 18: Multi-step speed terminal 3 19: Multi- stage speed terminal 4 20: Multi- stage speed pause 21: ACC/DEC time 1 22: ACC/DEC time 2 23: Simple PLC stop reset 24: Simple PLC pause 25: PID control pause 26: Traverse Pause(stop at the current frequency) 27: Traverse reset(return to the center frequency) 28: Counter reset 29: Torque control prohibition 30: ACC/DEC prohibition 31: Counter trigger 32: Reserve	0	◎
P05.02	S2 terminals function selection		45	◎
P05.03	S3 terminals function selection		46	◎
P05.04	S4 terminals function selection		0	◎
P05.09	HDI terminals function selection		0	◎

<table>
<tr><th>Function code</th><th>Name</th><th>Detailed description</th><th>Default</th><th>Modify</th></tr>
<tr><td></td><td></td><td>33: Cancel the frequency change setting temporarily
34: DC brake
35: Reserved
36: Shift the command to the keypad
37: Shift the command to the terminals
38: Shift the command to the communication
39: Pre-magnetized command
40: Clear the power
41: Keep the power
42: Solar disabled
43: Solar voltage reference
44: Switch between solar input and power frequency input
45: Full-water signal
46: Non-water signal
47–63: Reserved</td><td></td><td></td></tr>
<tr><td>P05.10</td><td>Polarity selection of the input terminals</td><td>If the bit is 0, the input terminal is positive;
If the bit is 1, the input terminal is negative.
<table><tr><td>BIT4</td><td>BIT3</td><td>BIT2</td></tr><tr><td>S4</td><td>S3</td><td>S2</td></tr></table>The setting range: 0x000–0x1FF</td><td>0X000</td><td>◎</td></tr>
<tr><td colspan="5">P06 Group Output terminals</td></tr>
<tr><td>P06.03</td><td>Relay RO1 output selection</td><td rowspan="2">0: Invalid
1: In operation
2: Forward rotation operation
3: Reverse rotation operation
4: Jogging operation
5: The inverter fault
6: Frequency degree test FDT1
7: Frequency degree test FDT2
8: Frequency arrival
9: Zero speed running
10: Upper limit frequency arrival
11: Lower limit frequency arrival
12: Ready for operation
13: Pre-magnetizing
14: Overload pre-warning</td><td>30</td><td>○</td></tr>
<tr><td>P06.04</td><td>Relay RO2 output selection</td><td>5</td><td>○</td></tr>
</table>

Function code	Name	Detailed description	Default	Modify
		15: Underload pre-warning 16: Completion of simple PLC stage 17: Completion of simple PLC cycle 18: Setting count value arrival 19: Defined count value arrival 20: External fault valid 21: Reserved 22: Running time arrival 23: Modbus communication virtual terminals output 24–26: Reserved 27: Weak light 28: Switching to solar power frequency input (threshold-based) 29: Switching to solar power frequency input (S input-based) 30: Switching to power frequency (threshold- or S input-based) **Note:** Function 30 is relay output combining the functions 29 and 28. When one of the two conditions is met, the relay output frequency is high.		
P06.10	Switch-on delay of RO1	0.000–50.000s	10.000 s	○
P06.11	Switch-off delay of RO1	0.000–50.000s	10.000 s	○
P06.12	Switch-on delay of RO2	0.000–50.000s	0.000s	○
P06.13	Switch-off delay of RO2	0.000–50.000s	0.000s	○
P07 Group Human-Machine Interface				
P07.01	Function parameter copy	Used to set the parameter copying mode. 0: No operation 1: Upload function parameters from the machine to keypad 2: Download function parameters (including the motor parameters) from the keypad to machine	0	○

Function code	Name	Detailed description	Default	Modify
		3: Download function parameters (excluding motor parameters of the P02 group) from the keypad to machine 4: Download function parameters (only motor parameters of the P02 group) from the keypad to machine **Note:** After the parameter is set to 1, 2, 3 or 4, and the operation is executed, the parameter is automatically restored to 0.		
P07.13	Software version of the control panel	1.00–655.32		●
P07.27	Type of the current fault	0: No fault 1: Inverter unit U phase protection (OUt1) 2: Inverter unit V phase protection (OUt2) 3: Inverter unit W phase protection (OUt3) 4: ACC overcurrent (OC1) 5: DEC overcurrent (OC2) 6: Constant-speed overcurrent (OC3) 7: ACC overvoltage (OV1) 8: DEC overvoltage (OV2) 9: Constant-speed overvoltage (OV3) 10: Bus undervoltage fault (UV) 11: Motor overload (OL1) 12: The inverter overload (OL2) 13: Input side phase loss (SPI) 14: Output side phase loss (SPO) 15: Rectifier module overheat (OH1) 16: Inverter module overheat (OH2) 17: External fault (EF) 18: 485 communication fault (CE) 19: Current detection fault (ItE) 20: Motor antotuning fault (tE) 21: EEPROM operation fault (EEP) 22: PID feedback disconnection fault (PIDE) 23: Brake unit fault (bCE) 24: Running time arrival (END) 25: Electrical overload (OL3) 26–31: Reserved		●
P07.28	Type of the last fault			●
P07.29	Type of the last but one fault			●
P07.30	Type of the last but two fault			●
P07.31	Type of the last but three fault			●
P07.32	Type of the last but four fault			●

Function code	Name	Detailed description	Default	Modify
		32: Short-to-ground fault 1 (ETH1) 33: Short-to-ground fault 2 (ETH2) 34: Speed deviation fault (dEu) 35: Maladjustment (STo) 36: Underload fault (LL) 37: Hydraulic probe damage (tSF) 38: PV reverse connection fault (PINV) 39: PV overcurrent (PVOC) 40: PV overvoltage (PVOV) 41: PV undervoltage (PVLV) Alarm: Weak light alarm (A-LS) Underload alarm (A-LL) Full-water alarm (A-tF) Water-empty alarm (A-tL)		
P08 Group Enhanced functions				
P08.28	Number of fault resets	0–10	5	○
P08.29	Automatic fault reset interval	0.1–3600.0s	10.0s	○

3.2 Special function parameters

Function code	Name	Detailed description	Default	Modify
P11 Group Protective parameters				
P11.00	Phase loss protection	0x000–0x111 LED ones place: 0: Input phase loss protection disabled 1: Input phase loss protection enabled LED tens place: 0: Output phase loss protection disabled 1: Output phase loss protection enabled LED hundreds place: 0: Input phase loss hardware protection disabled 1: Input phase loss hardware protection enabled -SS2 models: 0x000 -S2/-2 models: 0x010 -4 models: 0x110	Depend on model	○
P11.01	Frequency decreasing at	0.00–1.00 (When the voltage degree is 400V, the	0.85	◎

Function code	Name	Detailed description	Default	Modify
	sudden power loss	corresponding power loss frequency down voltage point of 0.85 is 460V.)		
P11.02	Frequency decreasing ratio at sudden power loss	Setting range: 0.00–P00.03 Hz/s After the power loss of the grid, the bus voltage drops to the sudden frequency-decreasing point, the inverter begin to decrease the running frequency at P11.02, to make the inverter generate power again. The returning power can maintain the bus voltage to ensure a rated running of the inverter until the recovery of power.	2.00 Hz/s	○
P15 Group Special function parameters for solar inverters				
P15.00	Solar inverter selection	0: Invalid 1: Enable 0 means the function is invalid and the group of parameters cannot be used 1 means the function is enabled, and P15 parameters can be adjusted	1	◎
P15.01	Vmpp voltage reference	0: Voltage reference 1: Max. power tracking 0 means to apply voltage reference mode. The reference is a fixed value and given by P15.02. 1 means to apply the reference voltage of Max. power tracking. The voltage is changing until the system is stable. **Note**: If terminal 43 is valid, the function is invalid.	1	◎
P15.02	Vmpp voltage keypad reference	0.0–6553.5V DC If P15.01 is 0, the reference voltage is given by P15.02. (During test, reference voltage should be lower than solar input voltage; otherwise, the system will run at lower limit of frequency)	250.0V	○
P15.03	PI control deviation	0.0–100.0% (100.0% corresponds to P15.02) If the ratio percentage of real voltage to reference voltage, which is abs (bus voltage-reference voltage)*100.0%/ reference voltage. If the value exceeds the deviation limit of P15.03, PI adjustment is available, otherwise, there is no PI adjustment and the value is defaulted to be 0.0% abs: the absolute value	0.0%	○

Function code	Name	Detailed description	Default	Modify
P15.04	Upper frequency limit of PI output	P15.05–100.0%(100.0% corresponds to P00.03) P15.04 is used to limit the Max. value of target frequency, 100.0% corresponds to P00.03. After PI adjustment, the target frequency cannot exceed the upper limit.	100.0 %	○
P15.05	Lower frequency limit of PI output	0.0%–P15.04 P15.05 is used to limit the min. value of target frequency. After PI adjustment, the final target frequency cannot lower than the set lower frequency limit. **Note:** P15.05≤P15.04≤100.0%	20.0%	○
P15.06	KP1	0.00–100.00 The proportion coefficient 1 of the target frequency The bigger the value is, the stronger the effect and faster the adjustment is.	15.00	○
P15.07	KI1	0.00–100.00 The integral coefficient 1 of the target frequency The bigger the value is, the stronger the effect and faster the adjustment is.	15.00	○
P15.08	KP2	0.00–100.00 The proportion coefficient 2 of the target frequency The bigger the value is, the stronger the effect and faster the adjustment is.	15.00	○
P15.09	KI2	0.00–100.00 The integral coefficient 2 of the target frequency The bigger the value is, the stronger the effect and faster the adjustment is.	15.00	○
P15.10	PI switching point	0.0–6553.5V DC If the absolute value of bus voltage minus the reference value is bigger than P15.10, it will switch to P15.08 and P15.09; otherwise it is P15.06 and P15.07.	20.0V	◎
P15.11	Water-level control	0: Digital input of the water-level control If the function code is 0, the water-level signal is controlled by the digital input. See 45 and 46 functions of S terminal for detailed information. If the full-water signal is valid, the system will report the warning (A-tF) and sleep after the time of	0	◎

Function code	Name	Detailed description	Default	Modify
		P15.13. During the warning, the full-water signal is invalid and the system will clear the warning after the time of P15.14. If the empty-water signal is valid, the system will report the warning (A-tL) and sleep after the time of P15.32. During the warning, the empty -water signal is invalid and the system will clear the warning after the time of P15.33.(the function codes of P15.13, P15.14, P15.32, P15.33 are related to the water-level control) 1–3: Reserved		
P15.12	Water-level threshold	0.0–100.0% If the simulating signal is less than the water-level threshold and keep in the state after the delay time set by P15.13, report A-tF and dormant. If the time is not reached, the signal is bigger than the water-level threshold; the time will be cleared automatically. When the signal time is shorter than the water-level threshold time, the time will be counted again. 0 is full-water and 1 is no water.	25.0%	○
P15.13	Full-water delay	0–10000s Time setting of full-water delay	5s	○
P15.14	Wake-up delay when full-water	0–10000s The delay time setting. During the full-water warning, if the detected water-level signal is higher than the threshold of P15.12, the delay counts, after the time set by P15.14, the warning is cleared. During the non-continuous application, the delay timing will clear automatically.	20s	○
P15.15	Hydraulic probe damage	0.0–100.0% 0.0%: Invalid. If it is not 0.0%, when the signal is longer than P15.15, it will report tSF fault directly and stop.	0.0%	○
P15.16	Operation time of water pump underload	0.0–1000.0s Set the operation time of underload operation. Under the continuous underload operation, it will report A - LL if the operation time is reached.	60.0s	○

Function code	Name	Detailed description	Default	Modify
P15.17	Current detection of underload operation	0.0%: Automatic detection 0.1–100.0% If it is 0.0%, it is determined by the inverter. If it is not 0.0%, it is determined by P15.17. 100.0% corresponds to the rated motor current. If the target frequency and the absolute value of the ramp frequency is less than or equal to P15.19, and the current corresponding to the current frequency is less than P15.17, after the time set by P15.16, it will report underload fault; otherwise, it will operate normally. If the state is not continuous, the delay counting will be cleared automatically.	50.0%	○
P15.18	Underload reset delay	0.0–1000.0s Underload reset delay The operation time and reset time are counted at the same time during underload, and it is bigger than P15.16 generally to ensure underload pre-warning will be reported. After the time set by P15.18-P15.16, it will reset. If the value is the same as P15.16, it will reset when report underload pre-warning.	120.0s	○
P15.19	Lag frequency threshold	0.00–200.00Hz P15.19 is the lag frequency for the analysis of underload operation. If the target frequency and the absolute value of the ramp frequency is less than or equal to P15.19, the current will be compared.	0.50Hz	◎
P15.20	Delay time of weak light	0.0–3600.0s Delay time of weak light If the output frequency is less than or equal to the lower limit of PI output frequency and the state lasts for the set value, it will report A-LS and dormant. If the state is not continuous, the delay counting will be cleared automatically. **Note:** If the solar voltage is lower than software undervoltage point, it will report directly and no need to wait for the set time. If P15.29=0, the system will switch to the power frequency input when the light is weak.	100.0s	○

Function code	Name	Detailed description	Default	Modify
P15.21	Delay time of wake-up at weak light	0.0–3600.0s Delay time of wake-up at weak light During the weak light warning, if the solar voltage is higher than the starting voltage, after the delay time, the warning will be cleared and it will run again. When P15.29=0, if the solar voltage is higher than P15.31, after the delay time, it will switch to solar input mode.	300.0s	○
P15.22	Initial reference voltage display	0.0–2000.0V		●
P15.23	Mini voltage reference of Max. power tracking	0.0–P15.24 Valid in MPPT Max. tracking voltage, the Mini. tracked voltage Track in the range of P15.23–P15.24. P15.24 needs to be bigger than P15.23. The less the difference, the faster the tracking is. But the Max. voltage needs to be in the range. P15.23 and P15.24 can be adjusted according to site operation. The default value depends on model. For models of 220V: 0.75kW: 80.0V 1.5kW, 2.2kW and 4kW: 100.0V For models of 380V: 2.2kW–5.5kW: 220.0V	Depend on model	○
P15.24	Max. voltage reference of Max. power tracking	P15.23–P15.28 Valid in MPPT Max. tracking voltage, the Max. tracked voltage The default value depends on model. For models of 220V: 0.75kW: 80.0V 1.5kW, 2.2kW and 4kW:100.0V For models of 380V: 2.2kW–5.5kW: 220.0V	Depend on model	○
P15.25	Adjustment of initial reference	0.0–200.0V MPPT begins to change from the reference voltage	Depend on	○

Function code	Name	Detailed description	Default	Modify
	voltage	Initial reference voltage = solar voltage-P15.25 For models of 220V, the default value is 5.0V. For models of 380V, the default value is 10.0V.	model	
P15.26	Upper and lower limit time of Vmppt	0.0–10.0s When P15.26 is set to 0.0, the automatic adjustment is invalid. If it is not 0.0, the upper and lower limit of Vmppt will be adjusted automatically after the time set by P15.26. The medium value is the current bus voltage and the limit is P15.27: Maximum / Minimum reference voltage=Current bus voltge±P15.27 and it will update to P15.23 and P15.24 at the same time	0.0s	○
P15.27	Upper and lower limit of Vmppt	20.0–100.0V The adjustment of the upper and lower limit.	30.0V	○
P15.28	Maximum value of Vmppt	P15.24–6553.5V The upper limit cannot exceed the P15.28 when Vmppt is the maximum value. The default value depends on model. For models of 380V, the default value is 750.0V, and for other models, the default value is 400.0V.	Depend on model	○
P15.29	Solar input and power frequency input selection	0: Automatic input 1: Forced power frequency input 2: Forced solar input If the value is 0, the system will switch between solar and power frequency according to the detected solar voltage and threshold; If the value is 1, the system will force to switch to power frequency input; If the value is 2, the system will force to switch to solar input. **Note:** When the terminal input 44 is valid, the function code will be invalid.	2	◎
P15.30	Threshold setting for switching to power	0.0V–P15.31 If the solar voltage is lower than the threshold or the light is weak, it can be switched to power frequency input through relay output. (**Note:** The	Depend on model	○

Function code	Name	Detailed description	Default	Modify
	frequency	minimum operation voltage of the system is 60V.) If the value is 0, the function is disabled. The default value depends on model. For models of 220V: 0.75kW: 60.0V 1.5kW, 2.2kW and 4kW: 80.0V For models of 380V: 2.2kW–5.5kW: 180.0V		
P15.31	Threshold setting for switching to solar input	P15.30–400V If solar voltage is higher than the threshold, after the delay time of P15.21, it can be switched to solar input through relay output. In order to avoid repeated switching, the threshold needs to be higher than the threshold of P15.30. If the value is 0.0, the function is disabled. The default value depends on model. For models of 220V: 0.75kW: 100.0V 1.5kW, 2.2kW and 4kW: 120.0V For models of 380V: 2.2kW–5.5kW: 240.0V	Depend on model	○
P15.32	Empty-water delay	0–10000s	5s	○
P15.33	Wake-up delay of empty -water	0–10000s	20s	○
P17 Group State viewing				
P17.38	Current of the main winding	Current of the main winding when applying the capacitance-removed mode to control the 1PH motor 0.00–100.00A	0.00A	●
P17.39	Current of the secondary winding	Current of the secondary winding when applying the capacitance-removed mode to control the 1PH motor. 0.00–100.00A	0.00A	●

Function code	Name	Detailed description	Default	Modify
P18 Group Parameters for viewing solar inverter states				
P18.00	Solar reference voltage	MPPT is set at the inverter side. This value is specified at the inverter side.		●
P18.01	Current solar voltage	It is the solar input voltage provided by the boost module.		●
P18.02	Bus voltage reference	It is used to set the reference voltage of the bus when solar input is adopted. For models of 220V, the default value is 330.0V, and for models of 380V, the default value is 570.0V. Setting range: 220.0V–600.0V	Depend on model	●
P18.07	Solar input power	Reserved. Unit: W		●
P18.10	Device configuration display	0: Solar power supply 1: AC grid power supply		●
P18.11	Current flow of pump	$Q = Q_N * f / f_N$, unit: m^3/h	0.0	●
P18.12	Current lift of pump	$H = 0.9H_N * (f / f_N)^2$, unit: m	0.0	●
P18.13	MSB of pump total flow	Displaying the most significant 16 bits of the total flow of the pump. Unit: m^3	0	●
P18.14	LSB of pump total flow	Displaying the least significant 16 bits of the total flow of the pump. Unit: m^3 Total flow of pump = P18.13 x 65535 + P18.14	0.0	●
P18.15	Pump total flow reset	When P18.15 is set to 1, the total flow of the pump is reset, and P18.13 and P18.14 are reset to zero to re-calculate the flow. After the reset, P18.15 is automatically modified to 0.	0	◎
P19 Group Voltage boost				
P19.06	Bus voltage reference	It is used to set the reference voltage of the bus when solar input is adopted. For models of 220V, the default value is 330.0V, and for models of 380V, the default value is 570.0V.	Depend on model	◎

Function code	Name	Detailed description	Default	Modify
		Setting range: 220.0V–600.0V		
P19.08	Boost start voltage	When the solar voltage reaches the start voltage, the boost circuit is started. Setting range: 60.0V–300.0V The default value depends on power level. For models of 220V: 0.75kW: 80.0V 1.5kW, 2.2kW and 4kW: 100.0V For models of 380V: 2.2kW–5.5kW: 220.0V	Depend on model	◎
P19.10	Rated flow of pump	Flow Q_N of the pump at the rated frequency and rated lift; unit: m^3/h	0.0	○
P19.11	Rated lift of pump	Lift H_N of the pump at the rated frequency and rated flow; unit: m	0.0	○

Note:

1. The time when the pump inverters operated to the lower limit of PI output frequency after starting is determined by the ACC time.

2. If the delay time counting conditions of various faults, such as weak light, full-water, and underload, are met, the inverter counts the delay time separately. After the delay time of a fault is reached, an alarm is reported and the delay time of the other two faults are still counted. After the alarm is restored, if the conditions of the other two faults are met, the counting of the delay time is continued. If the conditions of a fault are not met, the fault delay time is reset to zero.

4 Fault diagnosis and solution

Do as follows after the inverter encounters a fault:

1. First, check whether there is something wrong with the keypad. If yes, contact the local INVT office.
2. If there is nothing wrong, check function codes of P07 Group, view the corresponding recorded fault parameters, and identify the actual state when the current fault occurs based on all the parameters.
3. See the following table, check for exceptions based on the specific solutions.
4. Rectify the fault or seek help.
5. After ensuring that the fault has been rectified, perform fault reset and start the inverter.

Fault code	Fault type	Possible cause	Solutions
OV1	Overvoltage when acceleration	1. The input voltage is abnormal. 2. There is large energy feedback. 3. No brake components. 4. Braking energy is not open.	1. Check the input power. 2. Check if the DEC time of the load is too short or the inverter starts during the rotation of the motor or it needs to increase the energy consumption components. 3. Install the brake components. 4. Check the setting of related function codes.
OV2	Overvoltage when deceleration		
OV3	Overvoltage when constant speed running		
OC1	Overcurrent when acceleration	1. The acceleration or deceleration is too fast. 2. The voltage of the grid is too low. 3. The power of the inverter is too low. 4. The load transients or is abnormal. 5. The grounding is short circuited or the output is phase loss. 6. There is strong external interference.	1. Increase the ACC time. 2. Check the input power. 3. Select the inverter with a larger power. 4. Check if the load is short circuited (the grounding short circuited or the wire short circuited) or the rotation is not smooth. 5. Check the output configuration. 6. Check if there is strong interference.
OC2	Overcurrent when deceleration		
OC3	Overcurrent when constant speed running		

Fault code	Fault type	Possible cause	Solutions
		7. The overvoltage stall protection is not open.	7. Check the setting of related function codes.
UV	Bus undervoltage	1. The voltage of the power supply is too low. 2. The overvoltage stall protection is not open.	1. Check the input power of the supply line. 2. Check the setting of related function codes.
OL1	Motor overload	1. The voltage of the power supply is too low. 2. The motor setting rated current is incorrect. 3. The motor stall or load transients is too strong.	1. Check the power of the supply line. 2. Reset the rated current of the motor. 3. Check the load and adjust the torque lift.
OL2	Inverter overload	1. The acceleration is too fast. 2. The rotating motor is reset. 3. The voltage of the power supply is too low. 4. The load is too heavy. 5. The motor power is too small.	1. Increase the ACC time. 2. Avoid the restarting after stopping. 3. Check the power of the supply line. 4. Select an inverter with bigger power. 5. Select a proper motor.
SPI	Input phase loss	Phase loss or fluctuation of input R,S,T	1. Check input power. 2. Check installation distribution.
SPO	Output phase loss	U,V,W phase loss output (or serious asymmetrical three phase of the load)	1. Check the output distribution. 2. Check the motor and cable.
OH1	Rectifier module overheat	1. Air duct jam or fan damage 2. Ambient temperature is too high. 3. The time of overload running is too long.	1. Dredge the wind channel or change the fan. 2. Decrease the environment temperature.
OH2	Inverter module overheat		
EF	External fault	SI external fault caused by actions of input terminals	Check the external device input.
CE	485 Communication error	1. The baud rate setting is incorrect. 2. Fault occurs to the communication wiring. 3. The communication address is wrong.	1. Set proper baud rate. 2. Check the communication connection distribution 3. Set proper communication address. 4. Change or replace the

Fault code	Fault type	Possible cause	Solutions
		4. There is strong interference to the communication.	connection distribution or improve the anti-interference capability.
ItE	Current detection fault	1. The control panel connector is in poor contact. 2. The Hall component is damaged. 3. The magnifying circuit is abnormal.	1. Check the connector and rewire. 2. Replace the Hall component. 3. Replace the main control panel.
EEP	EEPROM fault	1. Error occurs in writing or reading control parameters. 2. EEPROM is damaged.	1. Press STOP/RST to reset. 2. Replace the main control panel.
PIDE	PID feedback fault	1. PID feedback is offline. 2. The PID feedback source disappears.	1. Check the PID feedback signal line. 2. Check the PID feedback source.
END	Running time reached	The actual running time of the inverter is longer than the preset running time.	Ask the supplier to adjust the preset running time.
OL3	Electrical overload	The inverter will report overload pre-alarm according to the set value.	Check the load and the overload pre-alarm points.
dEu	Velocity deviation fault	The load is too heavy or stalled.	1. Check the load and ensure it is normal. Increase the detection time. 2. Check whether the control parameters are normal.
STo	Maladjustment fault	1. The control parameters of the synchronous motors not set properly. 2. The autotuning parameter is not correct. 3. The inverter is not connected to the motor.	1. Check the load and ensure it is normal. 2. Check whether the control parameter is set properly or not. 3. Increase the maladjustment detection time.
LL	Electronic underload fault	The inverter will report the underload pre-alarm according to the set value.	Check the load and the underload pre-alarm points.

Fault code	Fault type	Possible cause	Solutions
tSF	Hydraulic probe damage	The hydraulic probe is damaged.	Replace the hydraulic probe.
PINV	PV reverse connection fault	The solar wiring is not properly performed.	Identify the positive and negative solar terminals, and rewire.
PVOC	PV overcurrent	1. The ACC/DEC is too fast. 2. The inverter power is too low. 3. The load suddenly changes or is abnormal 4. The grounding is short circuited.	1. Increase the ACC/DEC time. 2. Use an inverter with greater power. 3. Check whether the grounding or cable connection is short circuited or whether the rotation is blocked.
PVOV	PV overvoltage	The solar panel input voltage is too high or the model is 380V but set to 220V.	1. Reduce the serially connected solar panels. 2. Check and reset the model.
PVLV	PV undervoltage	1. The power of the serially connected solar panels is too low, or it is rainy and cloudy. 2. The starting current of the motor is too high.	1. Increase solar panels or test it again under normal sunlight. 2. Replace the motor.
A-LS	Weak light alarm	The sunlight is weak or too few solar panels are configured.	1. The device automatically operates after the sunlight gets stronger, and no processing is needed. 2. Check whether solar panels are properly configured.
A-LL	Underload alarm	The water pumping tank is empty.	Check the water pumping tank.
A-tF	Water full alarm	The water storing tank is full.	If the water full alarm function is enabled, the device automatically stops after the water full alarm remains for a certain period of time, and no processing is needed. If the water full alarm function is not enabled, check whether there are terminals misconnected.

Fault code	Fault type	Possible cause	Solutions
A-tL	Water empty alarm	The water pumping tank is empty.	1. If the water empty alarm function is enabled, the device automatically stops after the water empty alarm remains for a certain period of time, and no processing is needed. If the water empty alarm function is not enabled, check whether there are terminals misconnected.

5 Installation guide

5.1 Unpacking inspection

Before unpacking the product, check the information on the name plate on the packing box and the package of the product. Ensure that the product is the one you purchased and the packing box is not damaged. Should you have any questions, contact the supplier in a timely manner.

Packing list of a solar pumping inverter:

	BPD0K7TN(AC) BPD1K5–2K2TN(AC/ACS) BPD2K2TRAC(S)	**BPD004TNAC(S) BPD004–5K5TRAC(S)**
inverter	1	
Installation bracket	1	
Operation manual	1	
Expansion bolts	3 (M6 x 60)	4 (M6 x 60)
DC connector	1	2
Communication connector	1	
AC connector	1 (2), with a hexwrench	
Keypad	1	
Network cable	1	

5.2 Preparation for installation

5.2.1 Installation location

Select the installation location based on the following requirements:

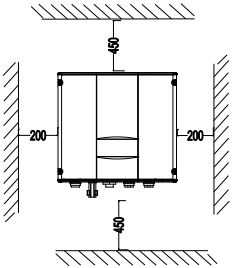

Figure 5-1 Installation spacing (mm)

(1)The environment temperature is between -25°C and 60°C.

(2)The installation surface is perpendicular to the horizontal line. Refer to the Figure 5.2.

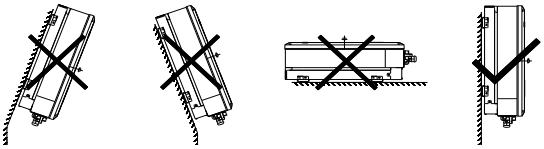

Figure 5-2 Installation position

5.2.2 Cable specifications

Select AC and DC cables based on the following specification requirements.

Cable specifications

Model	DC side	AC input side	AC output side	Communication cable
	Recommended cross-sectional area mm²/ Cable No.	Recommended cross-sectional area mm²/ Cable No.	Recommended cross-sectional area mm²/ Cable No.	Recommended cross-sectional area mm²/ Cable No.
BPD0K7TN(AC)/ BPD1K5TN(AC/ACS)/ BPD2K2TN(AC/ACS)/ BPD2K2TRAC(S)/ BPD004TRAC(S)	4mm²/12 AWG	4mm²/12 AWG	2.5mm²/14 AWG	0.52mm²/20 AWG
BPD004TNAC(S)/ BPD5K5TRAC(S)	4mm²/12 AWG	6mm²/10 AWG	4mm²/12 AWG	0.52mm²/20 AWG

Recommended crimp tools and insertion and removal tools for cables

	AC input side	AC output side	Communication cable
Tool	Cross screwdriver		Crimp tools: CT-P20/28
			Insertion and removal tools: RT-1.0

5.3 Mechanical installation

It is recommended to install the inverter on the firm wall or metal bracket vertically. Take the typical installation environment as the example, the manual describes how to install the inverter on a wall.

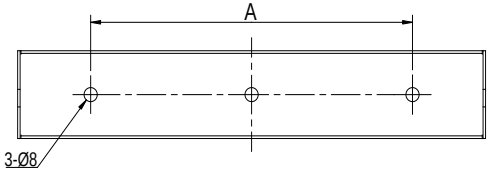

Figure 5-3 Installation bracket 1 for models of BPD0K7TN(AC) and BPD1K5–2K2TN(AC/ACS)

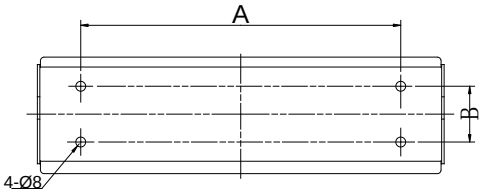

Figure 5-4 Installation bracket 2 for models of BPD2K2–5K5TRAC(S) and BPD004TNAC(S)

Sizes of installation brackets

Model	A (mm)	B (mm)
Installation bracket 1	195	/
Installation bracket 12	260	45

Installation steps of a solar pumping inverter:

(1) First, take down the installation bracket from the machine by only removing the M5 screws;

(2) Then use expansion bolts to fix the installation bracket at the proper location of a wall;

(3) Lift the inverter to suspend it on the installation bracket through the M8 screws;

(4) Finally, fasten the M5 screws to fix the inverter on the bracket. For firm installation, the operators cannot release the device until the inverter is installed on the bracket firmly.

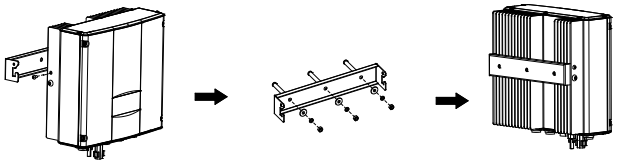

Figure 5-5 Inverter installation

5.4 Electrical installation

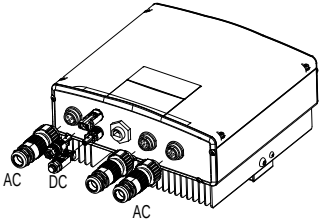

Figure 5-6 Electrical wiring of the inverter

Steps of electrical connection:

(1) If the distance between the solar inverter and the motor is longer than 50 meters, it is recommended to install the output reactor to avoid the frequent overcurrent protection and the motor isolation damage. For models of reactors, please consult INVT.

(2) Connect the DC output, AC input, AC output and the communication wire to the males, and then plug them to the females of the inverter. Tighten up to ensure the proper connection. Press a male as follows.

5.4.1 Communication terminal installation

(1) Plug the cable into the pin and the stripping length is 5.5 mm.

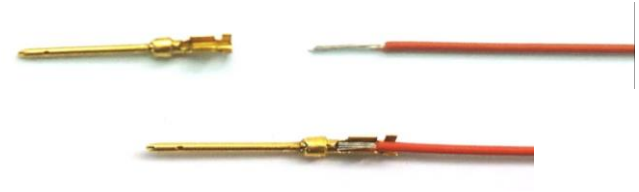

Figure 5-7 Making a communication cable

(2) Select the corresponding position and note the position of the jaw and contactor.

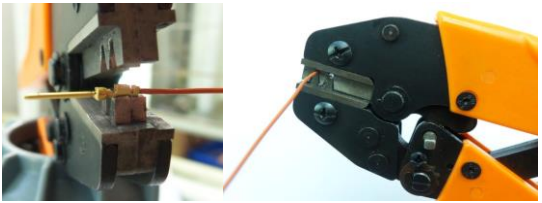

Figure 5-8 Crimping the cable

(3) After the crimping, a qualified contactor is finished.

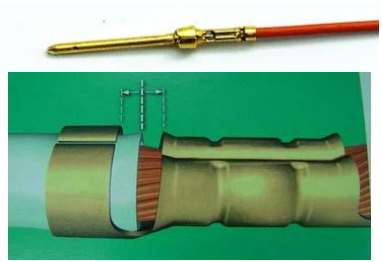

Figure 5-9 Qualified contactor

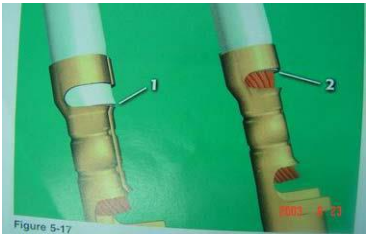

Figure 5-10 Unqualified contactor

(4) Install the contactor and the product



a. Push directly.

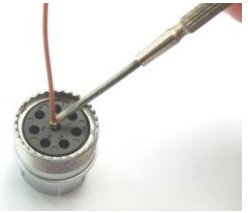

b. Push with tools when the cable is too thin.



c. The pushing is finished.

Figure 5-11 Cable installation

(5) Remove the pin.



a. Plug at the cable direction.



b. Press the notch with thumb after plugging.



c. Pull out.

Figure 5-12 Pin removing

5.4.2 Installation of AC input and output terminals

(1) Strip the cable insulation layer by about 10 mm.

(2) Route the cable through the connector according to below diagram.

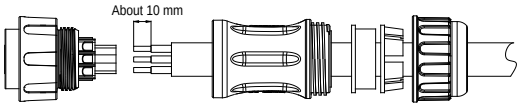

Figure 5-13 AC connector cable stripping

(3) Connect the bare conductor to the connector based on the pin order in the table in section 2.5.2, and fasten it with a hexwrench.

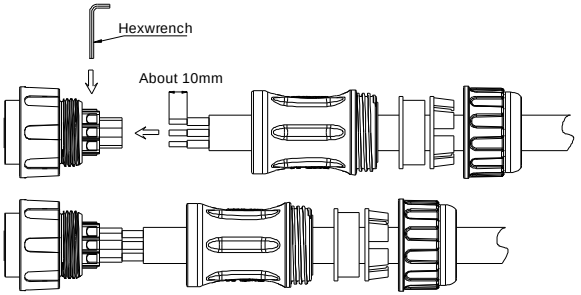

Figure 5-14 AC connector cable installation

(4) Tighten the connection part on the left side of the connector.

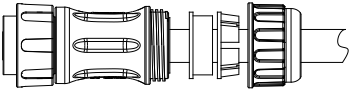

Figure 5-15 AC connector assembly

(5) Tighten the rear part of connector.

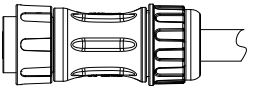

Figure 5-16 Assembled AC connector

5.4.3 GPRS module installation

The GPRS module is optional, and currently is supported only by BPD004TNAC(S) and BPD2K2–5K5TRAC(S). If a GPRS module is required, connect it to the "GPRS" interface, see Figure 2.2 (b), of the inverter. Figure 5.17 shows the connection. For details about how to use the GPRS module, see the user manual delivered with it.

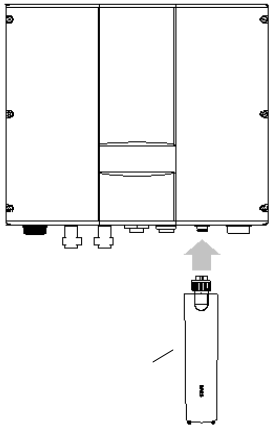

Figure 5-17 GPRS module installation

Visit the Internet of Things (IoT) monitoring system webpage for the solar pumping inverters at http://iot.invt.com:21000.

Scan the following QR codes to obtain the mobile application:

a. Android APP b. iOS APP

Figure 5-18 Links for downloading the solar pumping inverter application

5.5 Inspection before operation

Check the following before running the solar pumping inverter:

(1) Detect whether the voltage of the components is in the allowable input voltage range of the inverter;

(2) If applying mains supply, detect the voltage of AC wiring port at AC input side is in the allowable voltage range of the grid;

(3) Check the inverter is properly grounded;

(4) Ensure that all DC inputs or AC inputs are in power-off state before connecting the cables to the inverter;

(5) Ensure that all electrical safety precaution signs are clear on the installation site;

(6) Ensure that the external keypad is correctly connected.

5.6 Description of LED indicators

Displayed state	Description
Green LED blinking	The inverter has been power-on and the control circuit is working.
Green LED on	The inverter is running.
Yellow LED on	The inverter reports an alarm, and it will automatically restart after the alarm is removed.
Red LED on	The inverter is faulty.

6 Commissioning guide

6.1 Commissioning on solar power supply

1. Perform the wiring according to the diagram and check the wiring is correct. After the wiring is properly performed, switch on Q2.

   For models of 380V, you also need to switch on the DC switch on the enclosure.

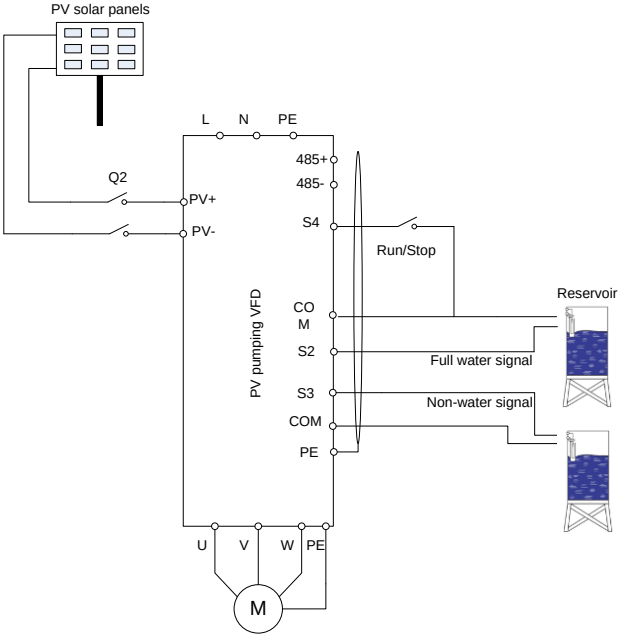

Figure 6-1 Wiring for solar power supply

2. Set the motor parameters.

   (1) Set P00.18=1 to restore the factory settings.

(2) Set the motor type through P02.00: 0 indicates 3PH motor and 1 indicates 1PH motor. You need to set P04.34 to 0x01 when the capacitor-removed 1PH motor is drived in the 2PH control mode. For models of 380V, only 3PH motors are applicable, that is, P02.00 can be set only to 0.

(3) Set the name plate of the motor, including P02.01, P02.02, P02.03, P02.04 and P02.05 (the maximum setting of P02.04 is 200V for the 1PH motor whose capacitor is removed).

3. Detect water yield for water pumps

Click "Run" key, observe the running frequency and water yield. If the running frequency or water yield is low at normal light, the motor wires may be reversed, it is necessary to set P00.13=1 or exchange the wiring of the motor. The operation direction of 1PH motor whose capacitor is removed can only be changed by function code.

4. Set the operation mode

After the water yield is normal and the system runs stably, set the operation mode.

(1) Automatic operation: set P00.01=1, P05.01=1;

(2) Manual operation: set P00.01=1, P05.01=0 and P05.04=1, select S4 as the start and stop control terminal, as shown in the preceding wiring diagram. The system can run only after S4 is switched on. For models of 380V, you can press the "RUN/STOP" button on the enclosure to run the inverter.

6.2 Commissioning on grid power supply

1. Perform the wiring according to the diagram and check whether the wiring is performed properly.

Switch off Q2 and then switch on Q1, as shown in Figure 6.2.

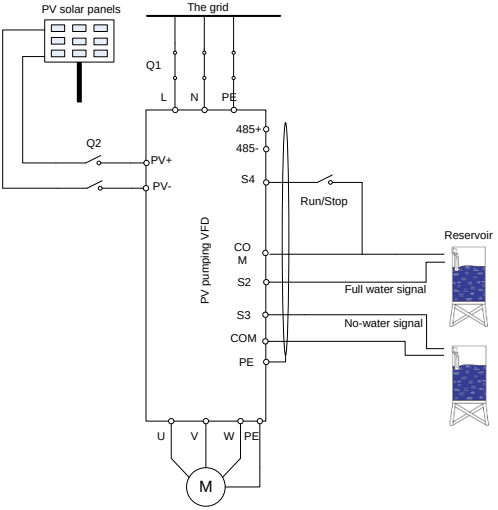

Figure 6-2 Wiring for grid power supply

2. Set the motor parameters

   (1) Set P00.18=1 to restore the factory settings.

   (2) Set the motor type through P02.00: 0 indicates 3PH motor and 1 indicates 1PH motor. You need to set P04.34 to 0x01 when the capacitor-removed 1PH motor is drived in the 2PH control mode.

   (3) Set the name plate of the motor, including P02.01, P02.02, P02.03, P02.04 and P02.05 (the maximum setting of P02.04 is 200V for the 1PH motor whose capacitor is removed).

3. Set P15.29=1.

4. Detect water yield for water pumps

   Click "Run" key, observe the running frequency and water yield. If the running frequency or water yield is low at normal light, the motor wires may be reversed, it is necessary to set P00.13=1 or exchange the wiring of the motor. The operation direction of 1PH motor whose capacitor is removed can only be changed by function code.

5. Set the operation mode

   After the water yield is normal and the system runs stably, set operation mode.

   (1) Automatic operation: set P00.01=1, P05.01=1;

   (2) Manual operation: set P00.01=1, P05.01=0 and P05.04=1, select S4 as the start and stop control terminal, as shown in preceding wiring diagram. The system can run only when S4 is switched on. For models of 380V, you can press the "RUN/STOP" button on the enclosure to run the inverter.

6.3 Commissioning on automatic switching between solar and grid power supply

1. Perform the wiring according to the diagram and switch on Q1 and Q2.

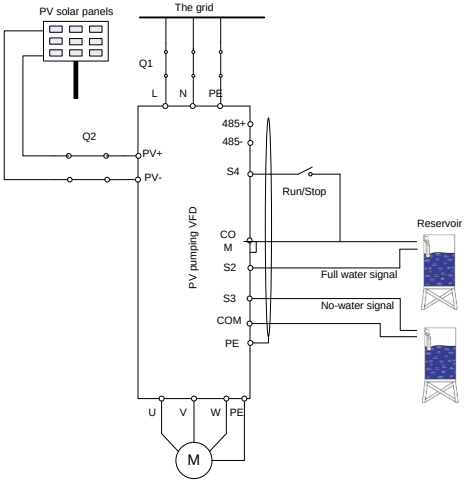

Figure 6-3 Wiring when both solar and grid power supplies are applied

2. Set the motor parameters

   (1) Set P00.18=1 to restore the factory settings.

   (2) Set the motor type through P02.00: 0 indicates 3PH motor and 1 indicates 1PH motor. You need to set P04.34 to 0x01 when the capacitor-removed 1PH motor is drived in the 2PH control mode.

(3) Set the name plate of the motor, including P02.01, P02.02, P02.03, P02.04 and P02.05 (the maximum setting of P02.04 is 200V for a 1PH motor whose capacitor is removed).

3. Set P15.29=0.

4. Detect water yield for water pumps

Click "Run" key, observe the running frequency and water yield. If the running frequency or water yield is low at normal light, the motor wires may be reversed, it is necessary to set P00.13=1 or exchange the wiring of the motor. The operation direction of 1PH motor whose capacitor is removed can only be changed by function code.

5. Set the operation mode

After the water yield is normal and the system runs stably, set the operation mode.

(1) Automatic operation: set P00.01=1, P05.01=1;

(2) Manual operation: set P00.01=1, P05.01=0 and P05.04=1, and select S4 as the start and stop control terminal, as shown in the preceding wiring diagram. The system can run only after S4 is switched on. For models of 380V, you can press the "RUN/STOP" button on the enclosure to run the inverter.

6.4 Advanced settings

Note: The default setting of the inverter for water pump can apply to most conditions and the advanced setting is unnecessary.

1. PI adjustment to the water yield

If the user requires large or low water yield, it is necessary to adjust PI (P15.06–P15.10) properly. The bigger PI parameters, the stronger the effect is, but the frequency fluctuation of the motor is bigger; in reserve, the lower the water yield is, the more stable the motor frequency is.

2. Commissioning of MPPT speed tracking

P15.23 and P15.24 is the minimum and maximum voltage of the power tracking in MPPT mode. If the voltage range is smaller, the faster the tracking is. But the bus voltage in normal operation needs to be in the range; otherwise the maximum power cannot be tracked. Generally:

(1) Model of BPD0K7TN(AC): P15.23=80.0 (Min. reference voltage), P15.24=400.0 (Max. reference voltage)

(2) Models of BPD1K5–004TN(AC/ACS): P15.23=100.0 (Min. reference voltage), P15.24=400.0 (Max. reference voltage)

(3) Models of BPD2K2－5K5TRAC(S): P15.23=220.0 (Min. reference voltage), P15.24=750.0 (Max. reference voltage)

These settings are only for reference and can be adjusted according to the actual applications or by automatic adjustment.

3. Fault setting and reset time setting of fault delay

If the pre-warning of weak light, full-water, empty and underload are needed, it is necessary to set the detection point, delay time and reset time according to the actual working. Full-water/no water settings are P15.11–P15.14, P15.32–P15.33; the function settings of underload are P15.16–P15.19; the function settings of weak light are P15.20–P15.21. Default settings can be used, too.

Note: P11.01 frequency decreasing at sudden power loss 0.85 corresponds to 265V. The user is allowed to modify the coefficient (≥0.58) according to needs (the corresponding undervoltage point of 0.58 is 180V, undervoltage fault when the actual bus voltage is lower than the value).

4. Special setting for 1PH motors

(1) When the 1PH motor is in bad running performance, the user can adjust P04 VF curve setting, set P04.00=1 and set P04.03–P04.08 to appropriate values according to commissioning conditions; increase the voltage if the motor cannot start and decrease the voltage if the current is high.

(2) When the light is normal and the system starts slowly, increase P15.25 initial voltage differential value appropriately.

(3) For the 1PH motors with 2PH control (capacitor-removing):

a) The maximum voltage needs to be less than 1/1.6 of the bus voltage. It is recommended to set the rated voltage less than 200V, P02.04=200V, or limit the maximum voltage output by multi-dot V/F curve;

b) Observe the current of the winding group through P17.38 and P17.39. The switched current is the combination current of the two winding groups. The impedance of the winding group is different, so the current is different at the same voltage output.

c) P04.35 can be used to change the output current of the main and secondary winding group. The qualified people are recommended to adjust; otherwise the motor performance may be impacted.

6.5 Flow chart of the commissioning

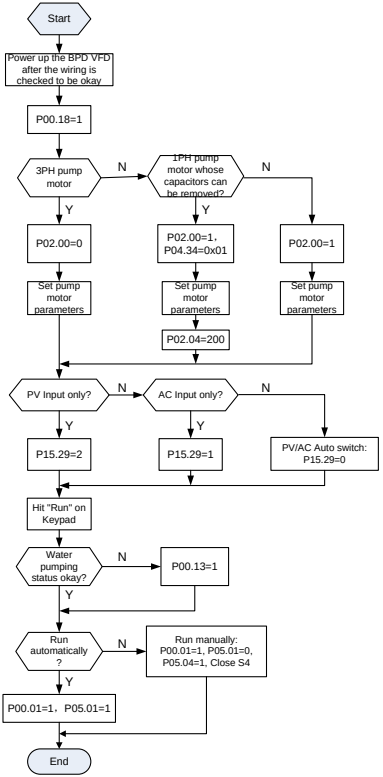

Figure 6-4 Commissioning flow chart

6.6 Simple parameter setting overview

Solar power supply			Grid power supply			Automatic switching		
3PH motor	1PH motor	1PH motor (capacitor-removed)	3PH motor	1PH motor	1PH motor (capacitor-removed)	3PH motor	1PH motor	1PH motor (capacitor-removed)
P00.18=1	P00.18=1	P00.18=1	P00.18=1	P00.18=1	P00.18=1	P00.18=1	P00.18=1	P00.18=1
P02.00=0	P02.00=1	P02.00=1	P02.00=0	P02.00=1	P02.00=1	P02.00=0	P02.00=1	P02.00=1
P02.01=rated power	P02.01=rated power	P02.01=rated power	P02.01=rated power	P02.01=rated power	P02.01=rated power	P02.01=rated power	P02.01=rated power	P02.01=rated power
P02.02=rated frequency	P02.02=rated frequency	P02.02=rated frequency	P02.02=rated frequency	P02.02=rated frequency	P02.02=rated frequency	P02.02=rated frequency	P02.02=rated frequency	P02.02=rated frequency
P02.03=rated speed	P02.03=rated speed	P02.03=rated speed	P02.03=rated speed	P02.03=rated speed	P02.03=rated speed	P02.03=rated speed	P02.03=rated speed	P02.03=rated speed
P02.04=rated voltage	P02.04=rated voltage	P02.04=200	P02.04=rated voltage	P02.04=rated voltage	P02.04=200	P02.04=rated voltage	P02.04=rated voltage	P02.04=200
P02.05=rated current	P02.05=rated current	P02.05=rated current	P02.05=rated current	P02.05=rated current	P02.05=rated current	P02.05=rated current	P02.05=rated current	P02.05=rated current
P15.29=2	P15.29=2	P15.29=2	P15.29=1	P15.29=1	P15.29=1	P15.29=0	P15.29=0	P15.29=0
P00.01=1	P00.01=1	P04.34=0x01	P00.01=1	P00.01=1	P04.34=0x01	P00.01=1	P00.01=1	P04.34=0x01
P05.01=1	P05.01=1	P00.01=1	P05.01=1	P05.01=1	P00.01=1	P05.01=1	P05.01=1	P00.01=1
		P05.01=1			P05.01=1			P05.01=1

Appendix A Recommended solar array configuration

Model	Open-circuit voltage degree of solar module			
	37±1V		45±1V	
	Module power (±5 Wp)	Modules per string x strings	Module power (±5 Wp)	Modules per string x strings
BPD0K7TN(AC)	250	5 x 1	300	4 x 1
BPD1K5TN(AC/ACS)	250	8 x 1	300	7 x 1
BPD2K2TN(AC/ACS)	250	10 x 1	300	8 x 1
BPD004TNAC(S)	250	10 x 2	300	8 x 2
BPD2K2TRAC(S)	250	10 × 1	300	8 x 1
BPD004TRAC(S)	250	10 × 2	300	8 x 2
BPD5K5TRAC(S)	250	14 × 2	300	12 x 2

Appendix B Energy efficiency data

Table B-1 Power losses and IE class

Model	Relative loss (%)								Standby loss (w)	IE class
	(0;25)	(0;50)	(0;100)	(50;25)	(50;50)	(50;100)	(90;50)	(90;100)		
BPD0K7TN(AC)	1.1	1.2	2.0	1.4	1.6	2.2	1.3	2.2	6	IE2
BPD1K5TN(AC/ACS)	1.1	1.4	1.9	1.3	1.6	2.2	1.8	2.6	4	IE2
BPD2K2TN(AC/ACS)	1.0	1.2	1.8	1.2	1.4	2.0	1.6	2.5	6	IE2
BPD004TNAC(S)	0.8	1.0	1.3	1.0	1.1	2.1	1.6	2.4	6	IE2
BPD2K2TRAC(S)	0.6	0.9	1.1	0.8	1.0	1.2	1.2	1.5	4	IE2
BPD004TRAC(S)	0.9	1.1	1.5	1.1	1.3	1.8	1.5	2.2	5	IE2
BPD5K5TRAC(S)	0.7	0.9	1.4	0.9	1.4	2.1	1.4	2.3	7	IE2

Table B-2 Rated specifications

Model	Apparent power (kVA)	Rated output power (kW)	Rated output current (A)	Max. working temperature (℃)	Rated power frequency (Hz)	Rated power voltage (V)
BPD0K7TN(AC)	1.6	0.75	4.2	50°C; derate by 1% for every increase of 1°C when the temperature exceeds 40°C.	50Hz/60Hz, allowed range: 47-63Hz	1PH 220V
BPD1K5TN(AC/ACS)	2.8	1.5	7.5			
BPD2K2TN(AC/ACS)	3.8	2.2	10			
BPD004TNAC(S)	6.1	4.0	16			
BPD2K2TRAC(S)	3.6	2.2	5.5			3PH 380V
BPD004TRAC(S)	6.2	4.0	9.5			
BPD5K5TRAC(S)	9.2	5.5	14			

Service line: 86-755-23535967 E-mail: overseas@invt.com.cn Website: www.invt.com

The products are owned by **Shenzhen INVT Electric Co.,Ltd.**
Two companies are commissioned to manufacture: (For product code, refer to the 2nd/3rd place of S/N on the name plate.)

Shenzhen INVT Electric Co.,Ltd. (origin code: 01)
Address: INVT Guangming Technology Building, Songbai Road, Matian, Guangming District, Shenzhen, China

INVT Power Electronics (Suzhou) Co.,Ltd. (origin code: 06)
Address: No. 1 Kunlun Mountain Road, Science & Technology Town, Gaoxin District, Suzhou, Jiangsu, China

Industrial Automation: HMI, PLC, VFD, Servo System, Elevator Intelligent Control System, Rail Transit Traction System

Energy & Power: UPS, DCIM, Solar Inverter, SVG, New Energy Vehicle Powertrain System, New Energy Vehicle Charging System, New Energy Vehicle Motor

66001-00352

Copyright© INVT.
Manual information may be subject to change without prior notice.

202204 (V1.8)